PACE
CIVIL, INC.
REDDING, CALIFORNIA

Memorandum

TO: Brian Huffaker, Director of Development Services
Hawkins Companies

DATE: January 20, 2009

PJR

FROM: Paul Reuter, Managing Engineer

JOB NO.: 2031.01

SUBJECT: UPDATED Water and Wastewater Facilities Narrative - Knighton Road Development (Replaces the February 21, 2008 Memorandum)

WATER SYSTEM REQUIREMENTS

The proposed development consists of a mix of major retail, general retail, shops, and sit down and fast food restaurants. It is estimated there will be approximately five acres of landscape irrigation. The attached Table 1 contains a breakdown of the proposed development and assigns water demands based on recent water consumption data from similar facilities within the Cities of Redding, Anderson and Yreka. The Maximum Daily Demand (MDD) is the flow used to design water supply facilities. As indicated in Table 1, the estimated MDD for the proposed development is about 265,000 Gallons per Day (GPD) or 184 Gallons per Minute (GPM). Demands in excess of the MDD, such as during the peak hour of the day, will be provided from on-site storage.

There is no municipal water system in place around the proposed development. Thus, it appears the only viable option for providing water is to develop a well. Currently, there is an existing well located on the west side of the site near Interstate 5. As described in the report prepared by Lawrence and Associates (L&A), dated August 20, 1998, (Well Installation Aquifer Testing and Groundwater Monitoring for the Flying J Knighton Road Travel Stop, Shasta County, California) this well has test pumped at 500 GPM for 24 hours. Thus, there appears to be ample volume to supply the proposed development.

In that report, data was presented that indicated the presence of iron and/or manganese in water samples taken from this well, depending on depth of extraction. While further analysis and data collection will be required to identify the extent of these constituents, it is assumed that iron/manganese treatment will be required. Iron/manganese treatment is a common requirement in many of the wells within the Bella Vista Water District, and some City of Redding wells, located to the north-east.

The well will pump water through the iron/manganese treatment system into an above-ground bolted steel water storage tank that will provide storage to accommodate demands in excess of

the MDD and the required fire flow volume, see Figure 1. A small booster pump station will pump water from the storage tank to a 10,000-gallon hydropneumatic tank that will maintain system pressure and provide storage for cycling the constant speed booster pump(s).

The booster pump station will contain two end-suction centrifugal pumps (one active and one backup) and one fire pump, located in a small building. All pumps will be controlled based on the pressure in the hydropneumatic tank. The fire pump will be called to run when the pressure in the hydropneumatic tank falls to some level and the booster pump will not keep up.

It is assumed that all commercial buildings will be equipped with fire sprinklers. The exact fire flow requirement will need to be determined based on building size and construction type. A fire flow of 2,000 GPM for 2 hours equates to 240,000 gallons of storage. Adding the requirement for equalizing volume (the difference between MDD and peak hourly flow) yields a tank size requirement of about 300,000 gallons.

The distribution system piping will consist of a 12-inch diameter main loop through the development that will feed fire hydrants spaced in accordance with Shasta County Fire Safety Standards. Smaller water lines will be fed off the 12-inch main to serve municipal and irrigation demands.

WASTEWATER SYSTEM REQUIREMENTS

Since there are no municipal sewage collection and treatment facilities near the proposed development, on-site sewage treatment and disposal appears to be the only viable option. Based on winter-time water consumption quantities for similar facilities in Redding, Anderson, and Yreka, it is estimated the proposed development wastewater flows will be about 80,000 GPD during dry weather conditions. Table 2 contains a breakdown of the wastewater flow determination for the proposed project.

The sewage collection system will consist of gravity sewer mains to a centrally-located submersible pump station that will convey raw sewage to the wastewater treatment facility.

Wastewater Treatment: In discussions with the California Regional Water Quality Control Board (CRWQCB), they have indicated the nitrogen limit in the groundwater cannot exceed 10 milligrams per liter (mg/L) of nitrate (measured as nitrogen). However, the CRWQCB has also indicated that any treated wastewater disposal system cannot have a noticeable impact on the background nitrate levels in the area groundwater. Therefore, if background nitrate levels in the groundwater are significantly below 10 PPM, it may be necessary to provide nitrate removal in the treatment process to concentrations well below 10 mg/L.

In August 2008, Lawrence and Associates (L&A) performed a series of groundwater samplings from eight different shallow monitoring probes around the site; currently, L&A is monitoring the depth to water in these probes on a bi-weekly basis. The individual water samples were tested for total nitrogen, which includes nitrate. These results are included in a Technical Memorandum by L&A. Based on the analytical data, L&A estimated the wastewater should be treated to 3.0 PPM nitrate as nitrogen to avoid adverse effects to the shallowest groundwater beneath the site.

In order to obtain this level of nitrogen removal, it is proposed that the wastewater treatment system incorporate a nitrification/denitrification step utilizing pre- and post-anoxic basins and Membrane Bioreactors (MBR's) for separating the permeate from the biological solids. MBR technology allows the operator to operate at higher solids concentrations in the treatment basin, which provides enhanced nitrogen removal through control of dissolved oxygen concentration in the recycle stream.

The MBR treatment plant consists of a partially buried reinforced concrete basin partitioned into two separate treatment trains. Each train consists of a series of treatment basins containing the following:

- Pre-Anoxic Basin: In this 6,700-gallon basin, raw sewage is mixed with return activated sludge from the MBR basin. The microorganisms in the activated sludge begin consuming the organics in the raw sewage.
- Pre-Aeration Basin: The pre-aeration basin is a 10,000-gallon basin consisting of fine bubble diffusers which provide an oxygen supply to sustain the colony of microorganism.
- Post-Anoxic Basin: The 5,000-gallon post-anoxic basin provides an environment in which the microorganisms in the activated sludge are starved for oxygen creating a propensity for other oxygenated compounds to become the oxygen source for the microorganisms. For example, oxygen molecules in the compound nitrate, are consumed and nitrogen gas is released into the atmosphere.
- MBR Basin: The 10,700-gallon MBR basin contains submerged membrane units that separate liquid from the activated sludge. This liquid (effluent) is highly treated and meets discharge requirements for Biochemical Oxygen Demand (BOD), suspended solids and nitrate.
- Aerobic Digester: The aerobic digester is a four-chambered basin consisting of an anoxic basin, membrane thickener, and two digester basins. Utilizing diffused air and MBR modules, the digester stabilizes the sludge by removing volatile organics and enhancing pathogen destruction, while reducing the volume to be disposed offsite.

The effluent is then disinfected utilizing ultraviolet radiation and discharged to the effluent dosing station, which conveys treated effluent to the subsurface disposal fields at the north end of

the site. At full build out, the wastewater treatment plant will be designed for the following criteria:

Average Dry Weather Flow (ADWF):	80,000 Gallons per Day (GPD)
Peak Wet Weather Flow (PWWF):	240,000 GPD
Influent Biochemical Oxygen Demand (BOD):	300 mg/L
Influent Suspended Solids (SS):	250 mg/L
Influent Total Kjeldahl Nitrogen (TKN):	60 mg/L
Effluent BOD:	5 mg/L
Effluent SS:	5 mg/L
Effluent Nitrate, as Nitrogen:	3 mg/L

Initially, the wastewater treatment plant will be designed for 67% of full build out capacity, or about 53,600 GPD;
however, the concrete basins and infrastructure will be designed for full build out. Once flows start approaching 67% of full build out, it will be necessary to add an additional submerged MBR unit into each MBR basin.

Wastewater Disposal: In February 2008, PACE performed a soils investigation of on-site soils in order to evaluate their compatibility for subsurface disposal of treated effluent. The investigation included excavation of 15 soils test pits and performance of 12 percolation tests at various depths in the area north of the proposed development. In general, the deeper soils (4-foot to 8-foot) consisted of gravelly sands and loams with percolation rates in the 5 to 12 minutes per inch (MPI) range. The shallow soils (less than 2-foot) consisted of loamy soils with percolation rates between 5.3 and 40 MPI. The acceptable percolation range in Shasta County, for conventional on-site sewage disposal systems, is 5 to 60 MPI. Thus, it appears the site could accommodate on-site wastewater disposal.

Wastewater disposal could consist of conventional leach trenches, or shallow drip tubes, such as the Geoflow Subsurface Drip System. However, in order to maximize the distance between the disposal trenches and the area groundwater, the shallow drip tube disposal option is recommended. However, due to the variability of percolation rates in the shallower soils, additional percolation tests would be necessary before final design of the subsurface drip system.

There are approximately 14.6 acres available at the north end of the site for subsurface treated effluent disposal. According to the technical memorandum by L&A, this entire area will need to be utilized in order to provide adequate separation to area groundwater and 100% disposal field replacement area per County Standards. Although a drip disposal system would maximize the separation to groundwater, a pressurized distribution system is recommended due to the large area requirement. This type of distribution system allows for alternatively dosing a number of zonal areas. It is anticipated that up to four zones will be required at full project build out.

Sludge Disposal: It is proposed that digested sludge will be removed from the aerobic digester and hauled to the Shasta County Septage Ponds once a week. Shasta County has expanded the septage ponds and has indicated it has surplus capacity to receive septage.

TABLE 1

KNIGHTON ROAD COMMERCIAL DEVELOPMENT

WATER SYSTEM DEMAND ESTIMATE

(Updated 1-19-09)

ESTIMATED WATER DEMANDS WITHOUT IRRIGATION

			BASED ON LOCAL AREA DATA						
	Number of	Area	Average Daily Demand		Max Month	Maximum Daily Demand			Peak Demand
Use	Business	(sqft)	(gpd/1000sqft)	(gpd)	(gpd/1000sqft)	(gpd/1000sqft)	(gpd)	(gpm)	(gpm)
Major Retail	4	482,000	80	38,560	100	150	72,300	50	201
Retail	9	185,000	40	7,400	50	75	13,875	10	39
Shops	6	47,700	30	1,431	40	60	2,862	2	8
Restaurants			(gpd/restaurant)						
Sit down	3	19,000	4,000	12,000			72,300	50	60
Fast food	2	7,000	3,300	6,600			13,875	10	30
TOTAL		**740,700**		**65,991**			**175,212**	**122**	**337**

Average Water Demand = 89 gpd/1000sqft

ESTIMATED IRRIGATION WATER DEMANDS

	Area	Annual Demand			Maximum Daily Demand			Peak Demand
Use	(Acres)	Ac-Ft/Ac	Ac-Ft/Yr		(gpd/Ac)	(gpd)	(gpm)	(gpm)
Landscape Irrigation	9	4	36		10,000	90,000	63	188
					TOTAL	**265,000**	**184**	**525**

TOTAL ANNUAL WATER CONSUMPTION

NON- IRRIGATION	**24,086,715**	**Gallons per year**
IRRIGATION	**11,736,000**	**Gallons per year**
TOTAL	**35,822,715**	**Gallons per year**

TOTAL PEAK DEMAND = 525 GPM

DESIGN BOOSTER PUMP FOR 550 GPM

DESIGN WELL FOR 200 GPM (Minimum)

NOTES:

1. Landscape Irrigation done during an 8 hour period on maximum day.

TABLE 2
KNIGHTON ROAD COMMERCIAL DEVELOPMENT

WASTEWATER ESTIMATE

Use	Number of Business	Area (sqft)	Average Daily Flow (gpd/1000sqft)	Average Daily Flow (gpd)	Maximum Daily Flow (gpd/1000sqft)	Maximum Daily Flow (gpd)
Major Retail	4	482,000	60	28,920	90	43,380
Retail	9	185,000	45	8,325	68	12,488
Shops	6	47,700	36	1,717	54	2,576
Restaurants			(gpd/restaurant)			
Sit down	3	19,000	3,200	9,600	4,800	14,400
Fast food	2	7,000	2,250	4,500	3,375	6,750
TOTAL		**740,700**		**53,062**		**79,593**

USE 80,000

Notes:

1. Average daily flows are based on 90% of the winter-time water consumption for similar facilities in Northern California and maximum flows are estimated by multiplying the average flows by 1.5.

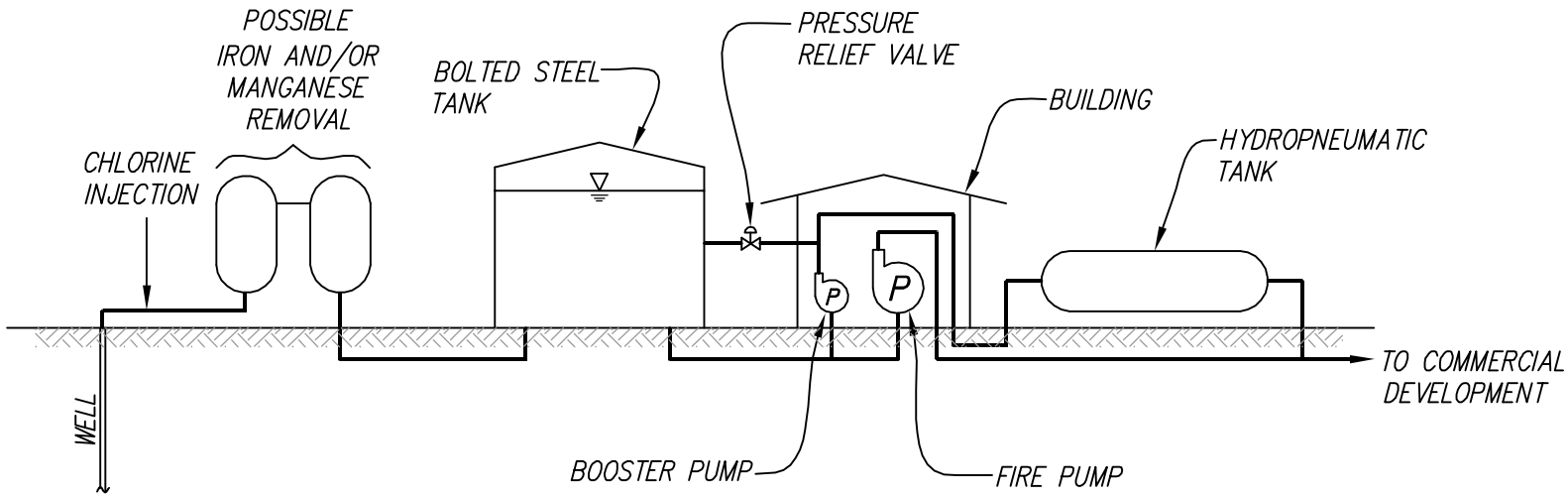

NOT TO SCALE

PACE CIVIL, INC.
REDDING, CALIFORNIA

KNIGHTON ROAD COMMERCIAL DEVELOPMENT

WATER SYSTEM SCHEMATIC

FIGURE 1

DATE 01/09

JOB # 2031.01

Plot Date: January 20, 2009 – 2:03 pm Login Name: rbowser
File Name: M:\Land Projects\2031.01 Hawkins Companies Development\dwg\Well Schematic Figure.dwg, Layout: 8.5x11 Landsc

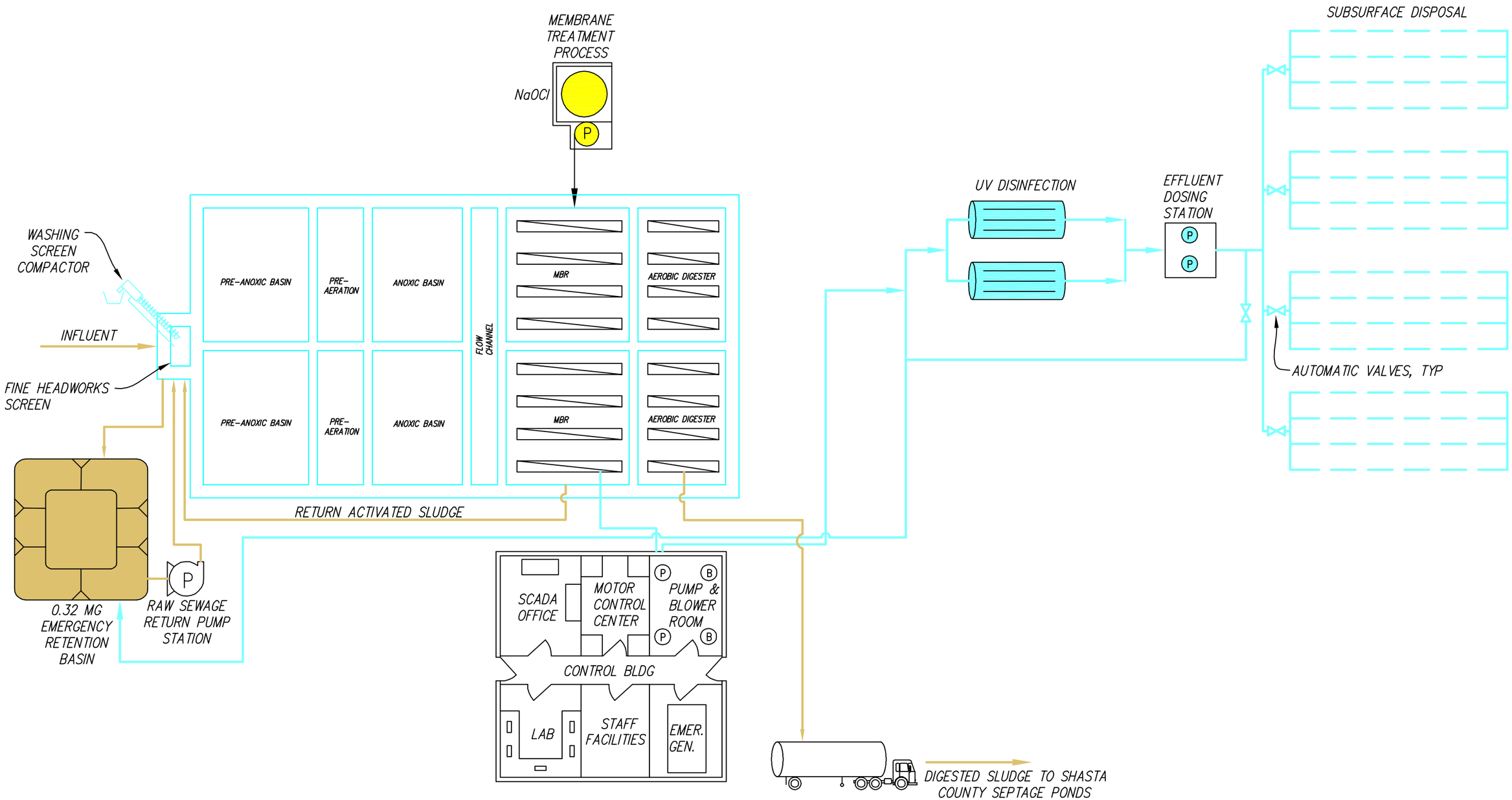

PACE CIVIL, INC.
REDDING, CALIFORNIA

HAWKINS COMPANIES
KNIGHTON ROAD DEVELOPMENT

WASTEWATER TREATMENT & DISPOSAL PROCESS DIAGRAM

FIGURE 1

DATE: 1/09

JOB NO.: 2031.01

Plot Date: January 20, 2009 - 2:14 pm Login Name: rbowser
File Name: M:\Land Projects\2031.01 Hawkins Companies Development\dwg\Process Diagram.dwg, Layout: 11x17