SHASTA COUNTY
DEVELOPMENT STANDARDS

Reprinted December 1997

Assembled by:

SHASTA COUNTY DEPARTMENT OF PUBLIC WORKS

1855 Placer Street
Redding, CA 96001
Phone: (916) 225-5661
FAX: (916) 225-5667

SHASTA COUNTY
DEVELOPMENT STANDARDS

Reprinted December 1997

SHASTA COUNTY BOARD OF SUPERVISORS

District 1 - Richard Dickerson

District 2 - Irwin Fust

District 3 - Glenn Hawes

District 4 - Molly Wilson

District 5 - Patricia A. Clarke

Assembled by:

SHASTA COUNTY DEPARTMENT OF PUBLIC WORKS

1855 Placer Street
Redding, CA 96001
Phone: (916) 225-5661
FAX: (916) 225-5667

SHASTA COUNTY DEVELOPMENT STANDARDS

Reprinted December 1997

TABLE OF CONTENTS

CHAPTER 1 - PLANNING (NOT RECEIVED AT TIME OF PUBLICATION)

CHAPTER 2 - ROAD POLICIES AND STANDARDS

Page

A. ROAD POLICIES

1. General Requirements 2-1
   a. Paving Required 2-1
   b. Standards 2-1
   c. Extension of Improvements 2-1

2. Exemptions 2-1
   a. Driveways 2-1
   b. Zero Building Sites 2-1

3. Exceptions 2-1
   a. Unpaved Surface Requirements - Minor Land Divisions and Multiple Dwelling Units 2-1
   b. Unpaved Surface Requirements - Existing Building Sites 2-2
   c. Special Purpose Road Standard 2-2
   d. Waiver 2-3

4. Deferrals of Improvements 2-3
   a. Curb, Gutter and Sidewalk 2-3
   b. Asphalt Surfacing 2-3
   c. Requirements of Deferred Improvements 2-3
   d. Deferrals for Public Sewers 2-4
   e. Completing Road And/or Related Improvements 2-4
   f. Second Family Dwelling 2-4
   g. Recorded Agreement Required 2-4

5. Rights of Way and Access 2-5
   a. Through Streets Required 2-5
   b. Applicable Road Sections 2-5
   c. Widths of Rights of way 2-5
   d. Dedications Required 2-5
   e. Future Street Rights of way 2-5
   f. Public Utility and Slope Easements 2-5

Page

6. Reimbursement to Developer 2-5
a. Oversizing Improvements 2-5
b. Agreement to Reimburse 2-5
c. Administration Costs 2-6
d. Agreement Coverage 2-6

B. ROAD STANDARDS

1. Classes of Roads 2-6
a. Typical Street Sections 2-6
1) Expressway - with Frontage Road 2-6
2) Arterial 2-6
3) Collector 2-6
4) Subcollector 2-6
5) Major Local 2-6
6) Local 2-6
7) Minor Local 2-6
8) Minor 2-7
9) Flag Lot Driveway 2-7
10) Special Purpose Road Standards 2-7

2. Construction Standards 2-7

C. ADMINISTRATION OF AIR POLLUTION MITIGATION FUND

1. Status of Fund 2-7

2. Procedure 2-8
a. Annual Construction Program 2-8
b. Engineering Services 2-8

3. Use of Fund 2-8
a. Loans for Paving 2-8
b. Assessment Districts 2-8
c. County Service Areas 2-9
d. Permanent Road Divisions 2-9

D. POLICIES AND STANDARDS NOT A LIMITATION

1. Policies and Standards not a Limitation 2-9

Page

E. DESIGN

1. General ... 2-9
2. Design Speed ... 2-10
3. Sight Distance ... 2-12
4. Grades ... 2-13
5. Horizontal Curves ... 2-15
6. Corner Site Distance at Rural Intersections ... 2-16
7. Delineation ... 2-16
8. Curb and Gutter ... 2-16
9. Structural Design of Paved Streets ... 2-17
10. Curb Depression ... 2-17
11. Plan Check and Inspection Deposit ... 2-18
12. Railroad Crossings ... 2-19
13. Utility Systems ... 2-19
14. Bridges ... 2-19
    a. Bridge Railings ... 2-20
    b. Foundation Investigation for Design ... 2-20
    c. Private Bridges (Driveways Only) ... 2-20
15. Embankment Guardrail ... 2-21
16. Horizontal Distance to Fixed Object ... 2-21

F. DRAINAGE

1. Required Information ... 2-21
2. Culverts and Storm Drains ... 2-21
3. Valley Gutters ... 2-23
4. Channels ... 2-23
5. Drainage Release ... 2-25
6. Design Criteria ... 2-25
7. Hydrology Analysis for Small Watersheds ... 2-27
    Attachment No. 1 (Interpolation Chart) ... 2-29
    Attachment No. 2 (Hydrologic Soil Groups) ... 2-30
    Attachment No. 3 (Runoff Curve) ... 2-31
    Supplement to Attachment No. 3 (Land Use Cover) ... 2-32
    Attachment No. 4 ... 2-33
    Attachment No. 5 ... 2-34
    Attachment No. 6 ... 2-35
    Attachment No. 7 ... 2-36
    Attachment No. 8 ... 2-37
    Attachment No. 9 ... 2-38
    Attachment No. 10 ... 2-39
    Attachment No. 11 ... 2-40
    Attachment No. 12 ... 2-41
    Attachment No. 13 ... 2-42
    Attachment No. 14 ... 2-43

Page

G. CONSTRUCTION STANDARDS

1. Standard Specifications 2-44
2. Requirements 2-44
3. Control of Work 2-44
   a. Permits 2-44
4. Trench Excavation and Backfill for Underground Utilities 2-45
5. Asphalt Concrete 2-45
6. Aggregate Base 2-45
7. Dust Control 2-46
8. Embankment Construction 2-47
9. Excavating Below Grade 2-47
10. Aggregate Subbase 2-47
11. Concrete 2-47
12. Construction Debris 2-47
13. Standard Construction Details 2-47
14. Pipe Lines 2-47
15. Miscellaneous Items 2-48
16. City of Redding Standards 2-48
17. Acceptance of Work 2-48
18. Maintenance Bond Required 2-48
19. Construction Bond 2-48
20. Chip Seal 2-49

APPENDICES

Public Works Deferred Improvement Agreements:
- Curb, Gutter & Sidewalk 2-1
- Asphalt Paving 2-2

Approved Form for Certification of Special Purpose Road 2-3
Improvement Plan Checking Fee Zone Map 2-4
Embankment Guardrail Placement 2-5
Construction Agreements:
- Parcel Maps 2-6
- Tract Maps 2-7

Maintenance Agreements:
- Tract 2-8

Typical Street Sections
- Expressway with Frontage Road 2-9
- Collector and Arterial (Urban) 2-10
- Collector and Arterial (Rural) 2-11
- Subcollector 2-12
- Major Local 2-13
- Local 2-14
- Minor Local 2-15

Page

Minor and Flag Lot D/W 2-16
Urban Road Intersection 2-17
Short Radius Curve Widening 2-18
Paved Gutter 2-19
Turnaround Alternates(Rural) 2-20
Type "A" Road Connection (Driveway)
Typical Section and Plan 2-21
Paved Dip and Culvert Section 2-22
Sight Distance for Driveway Connections 2-23
Road Connections
Type "B" 2-24
Type "C" 2-25
Type "D" 2-26
Manhole and Valve Cover Grade Adjustment 2-27
Commercial - Industrial Driveway
(Refer to City of Redding Standards)
Standard Street Barricade 2-28
Centralized Mail Delivery Pads 2-29
Bus Turnouts 2-30
Special Purpose Roads 2-31

Page

CHAPTER 3 - MAPPING AND SURVEYING

A. MAPPING AND SURVEYING

1. Mapping 3-1
2. Checking and Filing 3-2
3. Fees 3-2
4. Surveying
   a. Basis of Bearing 3-3
   b. Accuracy 3-3
   c. Monuments 3-3
5. Certificates and Statements:
   a. Final Maps 3-5
   b. Parcel Maps 3-9
   c. Records of Surveys 3-12
6. Subdivision Guarantee Letter 3-13
7. Subdivision Final Map Checking and Filing Procedure 3-14
8. Subdivision Parcel Map Checking and Filing Procedure 3-15
9. Record of Survey Checking and Filing Procedure 3-16

APPENDIX

3-1 Centerline Monument ..... Appendix 3-1

Page

CHAPTER 4 - GRADING AND EROSION CONTROL

A. GENERAL

1. Purpose 4-1
2. Definitions 4-1
3. Enforcing Officer Designated 4-2
4. Grading Restrictions 4-2
5. General Exemptions 4-3

B. PERMITS

1. Contents of Permit 4-4
2. Permit Issuance and Fee 4-5

C. ENFORCEMENT

1. Stop Orders 4-5
2. Unlawful Acts 4-6
3. Other Penalties 4-6

D. GRADING STANDARDS

1. Purpose and Limitations 4-7
2. Definitions 4-7
3. Cuts 4-9
4. Fills 4-9
5. Setbacks 4-10
6. Drainage and Terracing 4-10
7. Erosion Control 4-11
8. Grading Plan & Inspection 4-12
9. Archeological Sites 4-13

APPENDIX

4-1 Slope Setbacks ..... Appendix 4-1

Page

CHAPTER 5 - SEWAGE DISPOSAL STANDARDS

A. LAND DIVISIONS NOT SERVED BY COMMUNITY SEWERAGE

1. Disposal Area 5-1
2. Disposal Material Characteristics 5-2
3. Percolation Test, Test Pits and Groundwater Monitoring 5-2
4. Soil Analysis 5-5
5. Limitations 5-6
6. Waivers 5-7
7. Subdivisions with 100 or More Lots 5-8
8. Maps 5-8

B. EXISTING LOTS

1. Developed Lots 5-9
2. Undeveloped Lots 5-9

C. SOILS TESTING

1. Test Pits, Percolation Tests, and Groundwater Monitoring 5-9

D. CONSTRUCTION AND INSTALLATION

1. Onsite Sewage Disposal (General) 5-10
2. Area of Disposal Fields and Seepage Pits 5-11
3. Septic Tanks 5-12
4. Disposal Fields 5-13
5. Seepage Pits 5-15
6. Shasta County Director of Environmental Health Authority 5-15
7. Inspections 5-15

APPENDIX

A. Textural Classifications ..... Appendix A

TABLES

1. Soil Textural Classification Chart ..... Table 1
2. Minimum Horizontal Distance (in feet) Required ..... Table 2
3. Usable Area Required in Land Division Lots Served With Public Water ..... Table 3

Page

BULLETINS

1. Guidelines For Monitoring Well Construction and Observation for Mathematical Modeling ..... Bulletin 1

FIGURES

1. Ground Water Monitoring Well

SPECIAL DESIGNS

1. Certified Special Design System No. 1
2. Certified Special Design System No. 2
3. Certified Special Design System No. 3
4. Certified Special Design System No. 4
5. Certified Special Design System No. 5
6. Certified Special Design System No. 6

Page

CHAPTER 6 – FIRE SAFETY STANDARDS

6.0 GENERAL POLICIES 6-2
- 6.01 Authority 6-2
- 6.02 Scope 6-2
- 6.03 Consistency with Other Standards and Regulations 6-2
- 6.04 Definitions 6-3

6.1 ACCESS 6-6
- 6.11 General Road Design Requirements 6-7
- 6.12 Private Road, Pubic Road, and Non-Residential Driveway Standards 6-9
- 6.13 Residential Driveway Standards 6-13
- 6.14 Emergency Fire Escape Road (EFER) Standards 6-16

6.2 STREET SIGNING AND BUILDING NUMBERING 6-21
- 6.21 Addresses for Building 6-21
- 6.22 Street Identification Signing 6-21
- 6.23 Street Limitation Signing 6-22

6.3 FIRE PROTECTION WATER STANDARDS – With a Central Water System 6-23
- 6.31 Fire Flow and Hydrant Spacing 6-24
- 6.32 Duration 6-25
- 6.33 Pressure 6-25
- 6.34 Water Line Size and Design 6-26
- 6.35 Location 6-26
- 6.36 Materials and Hydrants 6-26
- 6.37 Hydrant Installation 6-27
- 6.38 Hydrant Maintenance and Marking 6-27

6.4 FIRE PROTECTION WATER STANDARDS – No Central Water System 6-29
- 6.41 Development Within a Water Agency Sphere of Influence 6-29
- 6.42 Residential Requirements 6-29
- 6.43 Fire Flow – Commercial 6-30

6.5 BUILDING CONSTRUCTION STANDARDS 6-31
- 6.51 Building Setbacks 6-31
- 6.52 Roofing 6-31
- 6.53 Chimney 6-31
- 6.54 Rafters 6-31

6.6 FUEL MODIFICATION 6-32
- 6.61 Disposal of Vegetation 6-32
- 6.62 Greenbelts 6-32
- 6.63 Vegetation Clearances Around Structures 6-32

Page

6.7 FLAMMABLE AND COMBUSTIBLE LIQUIDS 6-33
6.71 Aboveground Storage Tanks for Motor Vehicle Fuel-Dispensing Stations 6-33
6.72 Vaulted Tanks of Concrete or Equivalent 6-33
6.73 Aboveground Storage Tanks Without Vaults 6-34

6.8 RESERVED FOR FUTURE ADDITIONS TO STANDARDS 6-37

6.9 POLICIES AND STANDARDS; EXCEPTIONS; APPEALS 6-38
6.91 Policies and Standards Not a Limitation 6-38
6.92 Criteria for Exceptions and Appeals 6-38
6.93 Exceptions 6-39
6.94 Appeals 6-39

FIGURES

2-40 Turnaround Alternates – For Rural General Plan Designations
2-42 Minimum Fire Standard Turnaround Alternates (For Residential Driveways Over 300 Feet in Length)
FS-1 Minimum Fire Standard – Fire Hydrant – Dry Barrel Type
FS-2 Fire Hydrant Installation
FS-3 Minimum Fire Standard – Hydrant Protection Post
FS-4 Turnout for Fire Hydrants
FS-5 Typical Vertical Curves – For Private Residential Driveways
FS-6 Break-a-way Gate Assembly
FS-7 Typical Hydrant Marker Location
FS-8 Typical Sections for Emergency Fire Escape Road
FS-9 Sign for Emergency Fire Escape Road

Page

CHAPTER 7 - COUNTY SERVICE AREAS
SANITARY SEWER AND WATER SYSTEM STANDARDS

A. GENERAL PROVISIONS

1. General Requirements 7-1
2. Acceptance and Ownership 7-2
3. Fees & Costs 7-2
4. Household Equivalents 7-2
5. Classifications 7-4
6. Reimbursement to Developer 7-4
7. Policies and Standards Not a Limitation 7-5

B. CSA SANITARY SEWER DESIGN AND CONSTRUCTION CRITERIA

1. General Requirements 7-5
2. Acceptable Materials 7-5
3. Flow Criteria 7-5
4. Resistance Factor 7-5
5. Minimum Slope 7-6
6. Minimum Size 7-6
7. Minimum Radius 7-6
8. Minimum Cover 7-7
9. Manhole Spacing 7-7
10. Drop Manholes 7-7
11. Rodholes 7-7
12. Final Testing 7-7
13. Plugging 7-7
14. Maximum Depth of Cover 7-7
15. Acceptable Depth for Service 7-8
16. Crown Matching and Manhole Inverts 7-8
17. Vertical Curves 7-8
18. Sewer/Water Main Separation 7-8
19. Property Line Cleanouts 7-8
20. Laterals Connecting at Manholes 7-8
21. No Service Connections to Force Mains 7-8
22. No Joint Service Laterals 7-8
23. Individual Pumping System 7-8
24. Plans 7-9
25. Inspection 7-9
26. Compaction Testing 7-9

Page

C. WATER SYSTEM DESIGN AND CONSTRUCTION CRITERIA

1. General Requirements 7-9
2. Pipe Material 7-9
3. Pipe Size 7-9
4. Fire Hydrants 7-10
5. Blowoffs 7-10
6. Requirements for Reduced Pressure Backflow Valves, Double Checks, and Detector Checks 7-10
7. Air Valves 7-10
8. Valves 7-11
9. Minimum Cover 7-11
10. Plans 7-11
11. Inspection 7-11
12. Compaction Testing 7-11

D. TECHNICAL SPECIFICATIONS FOR TRENCH EXCAVATION, BACKFILL AND SURFACE RESTORATION

1. General 7-12
2. Materials 7-12
3. Workmanship 7-13

E. TECHNICAL SPECIFICATIONS FOR SANITARY SEWER

1. General 7-16
2. Materials 7-16
3. Workmanship 7-17

F. TECHNICAL SPECIFICATIONS FOR MANHOLES

1. Materials 7-22
2. Workmanship 7-23

G. TECHNICAL SPECIFICATIONS FOR WATER MAIN PIPE AND APPURTENANCES

1. Materials 7-25
2. Workmanship 7-31

Page

TABLES

7-1 Sewer Household Equivalents 7-3
7-2 Sewer Household Equivalents for Facilities with Multiple Occupancy Types 7-4
7-3 Minimum Allowable Sewer Line Slope 7-6
7-4 Minimum Radius Curves for Sewer Lines 7-6
7-5 Specification Time Required for a 1.0 PSIG Pressure Drop for Size and Length of Pipe Indicated for Q = 0.0015 7-21
7-6 Water Boxes 7-29
7-7 Below Grade Boxes 7-30

LIST OF FIGURES

G-1 Utility Locations
G-2 Trench Backfill
G-3 Trench Resurfacing - Class 'A1' and 'A2' Backfill
G-4 Trench Resurfacing - Class 'A3' and 'C' Backfill

S-1 Peaking Factors
S-2 Typical House Connection
S-3 Standard 4 Ft. Sewer Manhole
S-4 Manhole Adjustment & Anchorage Details
S-5 Lateral Cleanout
S-6 Standard Inside Drop Manhole
S-7 24-Inch Manhole Cover Assembly (Street Type)
S-8 Rodhole Installation
S-9 Rodhole Frame and Cover Assembly (6" Slope Type)
S-9A Rodhole Frame and Cover Assembly (8" Slope Type)
S-10 Oil and Grease Interceptor (OGI)
S-10B Oil and Grease Interceptors (OGI)
S-11 Sand and Oil Interceptor (SOI)
S-11A Sand and Oil Interceptors (SOI)
S-11B Sand and Oil Interceptors (SOI)
S-12 Interceptor Monitor Station

W-1 Water Service Connection (Single/Double 3/4" Thru 2")
W-2 Water Service Connection (3/4" Thru 2", 3 Services or More)
W-3 Water Service Connection (Meter & Bypass Detail 3" Services & Larger)
W-4 Locating Wire Warning Tape (For Water Mains and Services)
W-5 Thrust Block Details
W-6 Thrust Block Tables

Page

W-7 Water Valve Details (Paved and Unpaved Surfaces)
W-8 Roadway Air Valve Assembly
W-9 Blowoff Installation
W-10 Backflow Device Enclosure (3/4" Thru 2")
W-11 Backflow Device Enclosure (3" Thru 8")
W-12 Bacteriological Sample Station Installation
W-13 Bacteriological Sample Station Enclosure
W-14 Air Gap Separation
W-15 Double Check Valve and Reduced Pressure Principle Devices
W-16 Reduced Pressure Principle Devices (3/4" Thru 2")
W-17 Steel Enclosure for 3/4" Thru 2" Reduced Pressure Principle Device
W-18 Enclosure Subframe for 3/4" Thru 2" Reduced Pressure Principle Device
W-19 Combination Air Valve (CAV) Air and Vacuum - Air Release
W-20 Combination Air Valve (CAV) Enclosure Detail

APPENDICES

7-1 General Procedures for Formation of a County Service Area for Existing Facilities ..... Appendix 7-1
7-2 General Procedures for Formation of a County Service Area for a Development Project ..... Appendix 7-2

CHAPTER 2

ROAD POLICIES

AND

STANDARDS

CHAPTER 2 - ROAD POLICIES AND STANDARDS

A. ROAD POLICIES

1. General Requirements

a. No parcel, lot or building site shall be created or developed in the unincorporated area of the County unless it is directly served by a paved road.

A "paved road" includes (1) necessary subbase and drainage facilities, and (2) surfacing with asphalt or cement-based concrete.

b. All discretionary uses located in a C, I or MU General Plan designation and all land divisions shall be served by road improvements constructed to the applicable standard established under Section B, below.

c. Road improvements are required from an existing paved public road to each parcel or use being created. Where curbs, gutters, sidewalks or side paths are required under Section B, below, these improvements shall extend through each parcel for the full length of existing and new roads. The approving authority may also require improvements to the existing paved public road if it does not meet these Standards.

2. Exemptions

The following are exempt from the construction requirements of Subsection 1:

a. An internal driveway, except a flag lot driveway, serving a single dwelling unit.

b. Any land division that creates no new building site, unless the land division results in the physical segregation of existing dwelling units, any of which were lawfully constructed or installed after January 10, 1984, or unlawfully constructed or installed at any time.

3. Exceptions

A trust fund is established in the County treasury pursuant to Government Code Section 25252. All deposits made in lieu of paving shall be credited to the fund. Policies and procedures for expenditure of money in the fund are established in Section C.

a. An approving authority may permit a subdivider or developer to substitute a chip seal surface for an asphalt concrete surface, as required by Subsection 2 of Section B, below, for a land division that creates not more than one new parcel

for residential use, or for the construction or installation of a second or subsequent detached dwelling unit on a parcel, if all of the following requirements are met:

1) The resulting density will not exceed one dwelling unit per five acres for any project located in an SR or UR General Plan designation.

2) The owner of the project site enters into a deferral agreement with the County pursuant to paragraph b. of Subsection 4, and, in the case of a land division, the book and page at which the agreement is recorded is noted on the face of the recorded parcel map or notice of waiver of parcel map.

b. An approving authority may issue a building or mobile home installation permit for construction or installation of the first dwelling unit on a parcel served by a private road that does not meet the construction requirements of Subsection 2 of Section B, below, if:

1) The road is entirely surfaced with asphalt concrete or chip seal at least 16 feet wide at all points between a paved public road and the driveway, and

2) In the case of chip seal surfacing, all of the road between a paved public road and the driveway is maintained by a permanent road division.

c. An approving authority may permit a subdivider or developer to substitute a gravel road constructed to the special purpose road standard (Appendix 2-31) established under Section B. below if all of the following requirements are met:

1) The minimum parcel size is forty acres excepting land divisions created for family member housing in agriculture resource (A-C & A-G) areas. This provision does not override applicable General Plan minimum parcel size requirements.

2) All portions of all parcels are located above 1000 feet in elevation.

3) All parcels are located in T, AC, AG, M, N-H, N-R, N-O, or N-P General Plan designated areas.

4) The approving authority makes findings that the proposed road standard is appropriate for the proposed use and consistent with the definition of that standard in the publication entitled "A Policy on Geometric Design of Highways and Streets," most current edition by the American Association of State Highway and Transportation Officials.

5) A registered Civil Engineer or Traffic Engineer having a minimum coverage of $500,000 in errors and omissions insurance, a copy of which

filed with the County Risk Manager, certifies, on an approved form, that the road as designed and constructed meets all of the applicable standards referred to in the most current edition AASHTO publication, County Fire Safety Standards, and that the maximum anticipated traffic volume, on any road, will not exceed 100 vehicle trips per day.

The approving authority reserves the right to require an asphalt concrete road as described in Subsection 1 above.

d. The Department of Public Works or the approving authority may waive the requirements of Subsection 1, above, for minor or non-habitable accessory uses.

4. Deferrals of Improvements

a. Installation of curbs, gutters and sidewalks may be deferred by the approving authority for:

1) Any land division, when the smallest proposed parcel exceeds 2 acres and the deferral will not create a discontiguous pattern of road improvements, or

2) Any project in an MU (Mixed Use) General Plan designation located outside the South Central Region of the General Plan when public sewer facilities are not available, or

3) Any project where physical constraints such as topography, drainage conditions or other obstructions exist, which cannot be reasonably altered to allow the installation at the time the project is approved.

b. Surfacing of roads with asphalt concrete, as required by Subsection 2 of Section B, below, may be deferred by the approving authority when the roads are surfaced with chip seal pursuant to paragraph b of Subsection 3, above.

c. Any deferral granted under paragraph a. for a land division or under paragraph b. shall require that the deferred improvements:

1) Be completed if the property is further subdivided, or

2) Be completed if the property is further developed, unless the Director of Public Works further extends the time of construction of some or all of the defined improvements, and

3) Be constructed to the standards in effect at the time of construction.

d. Any deferral granted under paragraph a. for a project in an MU General Plan designation shall include a requirement that if public sewer facilities become available, the deferred improvements be completed within a reasonable time after notice from the County to construct the improvements.

e. Notwithstanding other provisions in this chapter, the fulfillment of road or related improvements for a parcel map creating four or fewer parcels shall not be required until the time a permit or other grant of approval for development of a parcel is issued by the County, or until the County determines that fulfillment of the construction requirements is required prior to that time based on considerations of public health and safety or of orderly development of the surrounding area. Where on-site or off-site improvement for such projects are required following parcel map approval, the resolution of approval shall set forth the factual findings by Government Code Section 66411.2.

f. An approving authority may permit a second building site to be developed as a second one-family residence without requiring road improvements to the project site as otherwise set forth in these road policies and standards, if all of the following requirements are met:

1) The existing access adequately serves the existing and proposed residences;

2) The proposed second one-family residence is intended and shall continue to be used by a family member of the owner of the first one-family residence on the same parcel; and

3) The property owner shall enter into a deferral agreement with the County:

a) acknowledging that the affected residences must be limited in use as required herein,

b) providing that the owner agrees to improve the access road to County standards if one or both of the residences are converted to non-family uses or a subsequent land division occurs, and

c) requiring that the owner give written notice to the County Department of Resource Management's Planning Division upon sale of the subject property or the conversion of one or both of the subject residences to non-family uses.

g. Any deferral granted under paragraph a. or b. shall be an agreement between the County and the owners of record of the property, substantially in the form set forth in Appendix 2-1 or Appendix 2-2, and shall be recorded in the Office of the County Recorder as a covenant running with the land. When any provision of

paragraph c. or d. applies, appropriate language shall be added to that set forth in Appendix 2-1 or Appendix 2-2.

5. Rights-of-Way and Access

a. All roads shall be through roads, except Local, Minor Local and Minor roads, and Flag Lot Driveways. Roads, excepting Flag Lot Driveways, which are not through roads must end at a cul-de-sac. Emergency ingress and egress shall be provided as required by the Fire Safety Standards.

b. All new and all on-site roads shall have minimum rights-of-way easement widths as shown on the applicable road sections established under Section B, below.

c. Rights-of-way or easements for all existing off-site roads shall be sufficient to permit construction of the required road improvements, but in no case less than 40 feet wide. Where additional off-site rights-of-way or easements must be obtained, the minimum width shall be as shown on the applicable road sections established under Section B, below.

d. When roads are constructed to County Standards, all on-site and off-site rights-of-way and easements shall be offered for dedication to the County. In all other cases, the subdivider or developer shall offer for dedication to the County the on-site rights-of-way and easements and also any interest the subdivider or developer has in the off-site rights-of-way and easements.

e. When a street or road right of way is required to the boundary of the subdivision to serve adjacent undeveloped property and to facilitate future traffic circulation, the developer shall dedicate the future street right of way.

f. Where required by these standards, minimum 15-foot-wide public utility and slope easements adjacent to each side of the road right of way shall be provided and offered for dedication.

6. Reimbursement To Developer

a. Whenever a requirement that improvements installed by the subdivider for the benefit of the subdivision shall contain supplemental size, capacity, number, or length for the benefit of property not within the subdivision, and that those improvements be dedicated to the public, the subdivider may request from the County a reimbursement for costs for oversizing.

b. In the event of the installation of improvements required by Subsection 6 of Section A, above, the County may enter into an agreement with the subdivider to reimburse the subdivider for that portion of the cost of those improvements in excess of the construction required for the subdivision if the following criteria is met:

1) The improvements must reasonably be expected to benefit other properties in the immediate area.

2) The improvements shall be limited to roads, water mains, sewer mains, traffic signals, intersection improvements, bridges, and major drainage structures which are constructed "off-site."

3) The off-site improvements must constitute an expenditure equal to at least 25% of the total project cost.

c. The County will recover costs for administration of the zones and the agreements, which will be added to the reimbursable amount and will be paid by the original developer or subdivider.

d. These agreements shall only be applied to subsequent subdivisions or use permits.

B. ROAD STANDARDS

1. Classes of Roads

a. The following classes of roads are established for all uses except commercial and industrial uses:

1) Expressway- With Frontage Road - Use where indicated on General Plan Circulation Element (Appendix 2-10).

2) Arterial - Designated in the County's General Plan, arterials generally provide connections between links in the highway network and/or major destinations. Access is limited where feasible (Appendix 2-11 or Appendix 2-12).

3) Collector - Designated in the County's General Plan, collectors generally accommodate traffic between arterials and/or activity centers. Access is limited where feasible (Appendix 2-11 or Appendix 2-12).

4) Subcollector - Serves 300 or more potential lots (Appendix 2-13).

5) Major Local - Serves from 50 to 300 potential lots (Appendix 2-14).

6) Local - Serves from 25 to 49 potential lots (Appendix 2-15).

7) Minor Local - Serves from 10 to 24 potential lots in rural areas (Appendix 2-16).

Serves from 3 to 24 potential lots in urban areas.

8) Minor - Serves 3 to 9 potential lots in non-urban general plan designations areas only (Appendix 2-17).

9) Flag Lot Driveway - Serves 1 to 2 lots (Appendix 2-17).

10) Special Purpose Roads - As defined by the current edition of AASHTO, to be used only as described in A.3.d.

b. Road standards for commercial and industrial uses shall be determined by the Department of Public Works by reference to the standards of paragraph a, above, adjusted to reflect the potential traffic generated by each use in comparison to the potential traffic generated by residential uses.

2. Construction Standards

a. Construction of improvements shall conform to the applicable sections and requirements of Appendix 2-10 through Appendix 2-17, incorporated here by reference. Special Purpose Roads shall be designed by the developer's engineer using the most current AASHTO standards. In lieu of improvement plans the developer shall submit a certification by a licensed civil or traffic engineer on an approved form that the design and construction has met these standards. The Certification Form is shown in Appendix 2-3.

In the event of a conflict between the Special Purpose Road Standards and the Fire Safety Standards, the higher standard will be used.

b. Where urban road sections are required, only that portion of the required roadway which fronts on or lies within the proposed development will be required to be constructed to the full urban width. The remainder of the roadway may be constructed to the rural standard which would be required for the same class of road.

c. In the case where the street improvements have a potential of serving more lots than is immediately being planned by the subdivider, to the extent that a four-lane road will be required or where the subdivision may have a street shown on the County General Plan as a major road, the developer will be required to build only the street improvements indicated by the subdivision street standard for his subdivision, but will provide the right of way for the ultimate four-lane road. If curb and gutter is required, the developer shall install the outer portions of the road for one lane of travel in each direction plus parking.

C. ADMINISTRATION OF AIR POLLUTION MITIGATION FUND

1. Status of Fund

The fund established pursuant to paragraph a. of Subsection 3 of Section A shall be known as the Air Pollution Mitigation (APM) Fund and shall consist of the money collected pursuant to Section A, all funds received by the County in repayment of loans made

pursuant to Subsection 3 of this section, all funds currently in or due to be credited to the Road Improvement Revolving Fund, and any other money directed by the Board of Supervisors to be deposited in the APM Fund.

2. Procedure

a. Between January 1 and March 1 of each year, the Director of Public Works shall recommend to the Board of Supervisors projects for the construction of paved roads to be funded by the APM Fund during the next fiscal year. When more than one project is recommended, the Director shall include a proposed priority listing. The Director's recommendations shall be based upon criteria developed by the Director in consultation with the Air Pollution Control District and shall include but not be limited to consideration of (1) providing paved roads to the most existing dwelling units for the least cost, and (2) the amount of unpaved roadway below the 1,000-foot elevation mark in each proposed project.

b. When the County has sufficient staff resources available, as determined by the Director of Public Works, to provide engineering services for roads to be constructed or reconstructed to County standards under this section, the costs of those services shall be funded by the County Road Fund. When it is necessary to employ outside engineers or consultants, the cost of such employment shall be initially borne by the APM Fund and repaid to that fund from any assessments, taxes, service charges or other revenues available for the work.

3. Use of Fund

a. Money in the APM Fund may be loaned by the County, at an interest rate set by the Board of Supervisors, to any entity formed pursuant to paragraph b., c. or d. of this subsection for the purpose of funding construction of paved roads. No money in the APM Fund may be used for road maintenance. As used in this section, "maintenance" and "construction" have the meaning ascribed to each term by Sections 27 and 29 of the Streets and Highways Code.

b. When an assessment district is proposed to fund the construction of a road, it shall be formed under Chapter 27 (commencing with Section 5870) of Part 3 of Division 7 of the Streets and Highways Code or the 1913 Municipal Improvement Act. County policies generally applicable to the formation of assessment districts apply to the formation of districts under this paragraph. Assessment districts shall not be formed under this paragraph to serve primarily new development. An assessment district formed under this paragraph may include parcels for which money was previously deposited in the APM Fund pursuant to Subsection 3 of Section A. Any assessment against such a parcel will be reduced by the lesser of the amount deposited for the parcel or the amount of the assessment against the parcel. The amount of the reduction is a charge against the APM Fund and shall be credited to the assessment district by the Auditor-Controller.

c. When a county service area (CSA) will fund construction of a road, and the CSA has adopted a road-paving program acceptable to the County, money collected from property within the CSA and deposited into the APM Fund shall be allocated by the Auditor-Controller to the CSA for use in its road-paving program. However, no funds shall be so allocated until the County has acquired the right-of-way for the proposed work and the improvement plans require the road, as constructed, to meet County standards for roads within the County's road system.

d. When a permanent road division (PRD) will fund construction of a road, and the Board of Supervisors, upon recommendation of the Director of Public Works, has adopted a road-paving program for some or all of the roads within the PRD, money collected from property within the PRD and deposited in the APM Fund shall be allocated by the Auditor-Controller to the PRD for use in its road-paving program.

D. POLICIES AND STANDARDS NOT A LIMITATION

The policies and standards established by this chapter are not a limitation upon the powers of an approving authority to protect public health and safety and to ensure consistency between projects subject to these policies and standards, the General Plan, all other applicable laws, policies and standards of Shasta County, and all applicable state and federal laws. The approving authority, by a 4/5 vote or greater may, with appropriate findings, deviate from the road policy and construction standards for an individual project if each of the following facts apply to the subject property:

1. There are unique circumstances or conditions of topography, size, shape, or location affecting such property;

2. The granting of the exception will not be detrimental to the public welfare, or injurious to or incompatible with adjacent or neighboring property; and

3. The granting of the exception will not adversely affect the County General Plan and the applicable community plan.

E. DESIGN

1. General

a. The design of all streets shall be in conformance with these development standards. Where specific information is not given, "A Policy on Geometric Design of Highways and Streets, AASHTO" current edition, or the current Caltrans "Highway Design Manual" and "Standard Plans" should be used as approved by the Director of Public Works.

b. Where streets are shown on the General Plan or any adopted Specific Plans but no plan line has been adopted by the County, the developer will be required to

provide the data and establish the alignment of the streets, to the approval of the Director of Public Works.

c. The centerlines of streets entering upon opposite sides of any intersecting street shall align directly opposite of each other or the centerlines shall be offset at least 125 feet.

d. All design values shown are minimum. The designer should strive for higher values whenever possible.

e. Unless otherwise approved by the Director of Public Works, all improvement plans shall be submitted on standard 24" X 36" sheets. The minimum scale used shall be 1" = 50'; a larger scale may be required for special details.

f. Definitions

LEVEL terrain is the condition where highway sight distances, as governed by both horizontal and vertical restrictions, are generally long or could be made to be so without construction difficulty or major expense.

ROLLING terrain is that condition where the natural slopes consistently rise above and fall below the highway grade line and where occasional steep slopes offer some restriction to normal highway horizontal and vertical alignment.

MOUNTAINOUS terrain is that condition where longitudinal and transverse changes in the elevation of the ground with respect to a highway are abrupt and where the roadbed is obtained by frequent benching or side hill excavation.

2. Design Speeds

Geometric features of design shall be consistent with the following minimum design Speeds.

a. Fire Access Roads and Flaglot Driveways

There is no minimum design speed; however the minimum radius for horizontal and vertical curves shall be 50 feet.

b. Minor, Minor Local, Local, and Major Local Streets

1) Rural Designations:

CLASSIFICATION	TERRAIN		
	LEVEL	ROLLING	MOUNTAINOUS
Minor	30	20	20
Minor Local	30	30	20
Local	40	30	20
Major Local	50	40	30
	MINIMUM DESIGN SPEEDS (MPH)		

2) Urban Designations:

The preferable minimum Design Speed for all classifications is 30 MPH. When conditions warrant, as approved by the Director of Public Works, the minimum Design Speed may be reduced to 20 MPH.

c. Subcollector, Collector and Arterial Streets

1) Rural Designations:

CLASSIFICATION	TERRAIN		
	LEVEL	ROLLING	MOUNTAINOUS
Two Lane	50	40	30
Four Lane	60	50	40
	MINIMUM DESIGN SPEEDS (MPH)		

2) Urban Designations:

The minimum required design speed for all classifications is 30 MPH.

3. Sight Distance

Minimum stopping sight distance and passing sight distance are a direct function of the design speed. A height of eye of 3.50 feet and a height of object of 0.50 feet is used to determine stopping sight distance. A height of eye of 3.50 feet and a height of object of 4.25 feet is used to determine passing sight distance. All streets shall be designed using the minimum stopping sight distance criteria.

DESIGN SPEED (MPH)	ASSUMED SPEED FOR CONDITION (MPH)	STOPPING SIGHT DISTANCE (ROUNDED FOR DESIGN) (FT)	*K VALUE FOR CREST VERTICAL CURVES (ROUNDED)	*K VALUE FOR SAG VERTICAL CURVES (ROUNDED)
20	20-20	125-125	10-10	20-20
25	24-25	150-150	20-20	30-30
30	28-30	200-200	30-30	40-40
35	32-35	225-250	40-50	50-50
40	36-40	275-325	60-80	60-70
45	40-45	325-400	80-120	70-90
50	44-50	400-475	110-160	90-110
55	48-55	450-550	150-220	100-130
60	52-60	525-650	190-310	120-160
65	55-65	550-725	230-400	130-180
70	58-70	625-850	290-540	150-220
		Minimum stopping sight distance (wet pavements)		

*K value is a coefficient by which the algebraic difference in grade may be multiplied to determine the length in feet of the vertical curve which will provide minimum sight distance.

4. Grades

a. Arterial Streets

1) Rural

For rural arterials decrease the maximum grade shown for urban by 2%.

2) Urban

TYPE OF TERRAIN	DESIGN SPEED (MPH)			
	30	40	50	60
	MAXIMUM GRADE (PERCENT)			
Level	8	7	6	5
Rolling	9	8	7	6
Mountainous	11	10	9	8

b. Subcollector and Collector Streets

1) Rural

TYPE OF TERRAIN	DESIGN SPEED (MPH)					
	20	30	40	50	60	70
	MAXIMUM GRADE (PERCENT)					
Level	7	7	7	6	5	4
Rolling	10	9	8	7	6	5
Mountainous	12	10	10	9	8	6

2) Urban

TYPE OF TERRAIN	DESIGN SPEED (MPH)					
	20	30	40	50	60	70
	MAXIMUM GRADE (PERCENT)					
Level	9	9	9	7	6	5
Rolling	12	11	10	8	7	6
Mountainous	14	12	12	10	9	7

Maximum grades shown for rural and urban conditions of short lengths (less than 500 ft) and on one-way down grades may be one percent steeper.

c. All other street designations:

TYPE OF TERRAIN	DESIGN SPEED (MPH)				
	20	30	40	50	60
	MAXIMUM GRADE (PERCENT)				
Level	8	7	7	6	5
Rolling	11	10	9	8	6
Mountainous	16	14	12	10	-

For streets in commercial and industrial areas, gradient design shall be less than 8%; desirably, it should be less than 5%, and flatter gradients should be emphasized.

d. Private Driveways

The maximum grade at any individual section of the driveway is 16%. Driveways with a grade of over 12% slope shall be paved in accordance with flaglot driveway standards.

e. Minimum grade (Urban streets)

To provide for proper drainage, the desirable minimum grade that should be used for streets with outer curbs is 0.30%, but a minimum grade of 0.20% may be used, if approved by the Director of Public Works.

5. Horizontal Curves

Horizontal curves shall be designed with superelevation based on the formula:

$$R = \frac{V^2}{15(S+F)}$$

where: R = Radius of curve (feet)
V = Design speed (MPH)
S = Superelevation (ft/ft)
F = Friction factor

(V) DESIGN SPEED (MPH)	(F) FRICTION FACTOR
20	0.17
30	0.16
40	0.15
50	0.14
60	0.12
70	0.10

Every effort should be made to exceed the minimum calculated R values, and such minimum radii should be used only when the cost or other adverse effects of realizing a higher standard are inconsistent with the benefits.

For rural roads, superelevation shall be not more than 0.10 except where snow and ice conditions prevail, in which case the superelevation should be not more than 0.08.

For urban roads, superelevation shall not be more than 0.03.

Superelevation diagrams with transitions shall be shown on the improvement plans whenever the combination of curve radius and design speed indicates a need for superelevation.

For central angles smaller than 30 minutes, no curve is required.

Curve widening is required for all curves with a radius of 300 feet or less (Appendix 2-18).

6. Corner Site Distance at Rural Intersections

Intersections, including median openings, should be designed with adequate corner sight distance as follows:

DESIGN SPEED (MPH)	CORNER INTERSECTION SIGHT DISTANCE (FT)[a]
60	650[b]
50	515
40	415
30	310
20	210

[a] Corner sight distance measured from a point on the minor road at least 15 feet from the edge of the major road pavement and measured from a height of eye at 3.50 feet on the minor road to a height of object at 4.25 feet on the major road.

[b] At 60 MPH stopping sight distance governs.

Intersections should be carefully situated to avoid steep profile grades and to ensure adequate approach site distance. An intersection should not be situated on a short-crest vertical curve, just beyond a short-crest vertical curve, or on a sharp horizontal curve. When there is no practical alternate to such a location, the approach sight distance on each leg should be checked carefully.

7. Delineation

At the expense of the developer, street signs, striping, traffic delineation devices, warning and regulatory signs, guard rail, barricades and other similar devices, where required by the Department of Public Works, shall be installed according to accepted engineering practices. Signing shall be in conformance with the Department of Public Works' standards and the current State of California Uniform sign chart. Installation of traffic devices shall be subject to review and modification after construction.

The County will, at the subdivider's expense, install the signs and striping.

8. Curb and Gutter

When required, standard vertical curb and gutter shall be used in all commercial areas, on all curb returns and at all drainage inlets. In residential areas, either vertical curb and gutter or rolled curb and gutter may be used provided that drainage capacity criteria is met. The minimum transition length from rolled curb to vertical curb shall be 5 feet.

Curb, gutter, and/or sidewalk will not be required on the portion of the required access road not located within or on the boundaries of the development.

9. Structural Design of Paved Streets

The structural design of paved streets shall be based upon "R" values determined by the current California Test Method 301.

The developer shall have a private soils laboratory perform field tests to determine the "R" value of the material to be used for road construction. Using these values, the developer's engineer will establish the appropriate structural section to be used for each road. Laboratory reports and engineer's calculations used shall be submitted with the initial submittal of the improvements plans.

The following traffic indexes will be used in determining the structural design:

For Expressway - thoroughfare - the minimum traffic index shall be 9.0, or as determined by the Director of Public Works.

For Arterial and Collector Highways - the minimum traffic index shall be 7.0, or as determined by the Director of Public Works.

For Subcollector Street - the minimum traffic index shall be 6.5, or as determined by the Director of Public Works.

For Minor and Local Streets - the traffic index shall be:

(1)	minor	4.5
(2)	minor local	5.0
(3)	local	5.5
(4)	major local	6.0

Where the centerline grade exceeds 8% the required minimum thickness of A.C. shall be increased to 0.17 feet.

10. Curb Depression

Each curb return shall have a standard curb depression where sidewalks terminate at a street, driveway or a crosswalk; the final 12 inches of walk shall be marked with a series of grooves 1/4 inch wide by 1/4 inch deep at one-inch spacing for the full width of the sidewalk. This section may be deferred until construction of sidewalks occur.

11. Plan Check and Inspection Deposit

The developer shall have improvement plans prepared by a registered civil engineer for all required construction. The plans shall be approved by the Director of Public Works prior to commencement of construction.

The developer shall show existing and proposed location of all utilities, as approved by the utility company and the Director of Public Works, on the improvement plans.

Each set of plans will require an engineer's estimate which itemizes all work including unit cost amounts for each major item of work, such as grading, base, paving, concrete work, and drainage facilities. Unit cost amounts should reflect what it would cost the County to do the work if the contract was put out to bid. The unit costs will be established by the County.

A deposit to cover the improvement plan check and construction inspection is required prior to the improvement plan check. The amount of the deposit shall be as specified in the plan check and inspection deposit fee schedule, dependent upon the amount of the engineer's estimate. The plan check deposit is held by the Department of Public Works, and the actual amount of the work is charged against the project. Prior to final acceptance of the work, the actual cost against the project is determined: (1) if the amount of the deposit exceeds the costs, then the excess will be refunded; (2) if the amount of the deposit is insufficient, then the deficit amount is required.

PLAN CHECK AND INSPECTION DEPOSIT FEE SCHEDULE		
ENGINEER'S ESTIMATE	REQUIRED DEPOSIT	
	ZONE 1	ZONE 2
$0 - $5,000	$400 Minimum	$550.00
$5,000 - $20,000	6% of Estimate + $100	6% of Estimate + $250
$20,000 - $100,000	$1,200 + 2% of Amount Over $20,000	Same as Zone 1
$100,000 and up	$2,800 + 1% of Amount Over $100,000	Same as Zone 1

APPENDIX 2-4 FOR ZONE LIMITS

12. Railroad Crossings

Provisions shall be made for any and all railroad crossings necessary to provide street access to or circulation within the proposed development, including the preparation of all documents necessary for approval from the California State Public Utilities Commission and appropriate railroad for establishment and improvement of such crossing. The cost of such railroad crossing improvement, including all necessary approval documents, shall be borne by the developer.

13. Utility Systems

In the case of developments included within an existing and operating Water, Public Utility, or Community Services District, the developer shall install the utility system and appurtenances in conformance with the standards established by the district. The developer shall furnish a letter from the district certifying that the improvement design is to their standards prior to approval of construction plans by the Director of Public Works. Prior to backfilling the utility trenches, the developer shall furnish evidence from the district certifying that the improvements have been installed to their satisfaction.

14. Bridges

All highway bridges shall be designed in accordance with the current edition and interims of the AASHTO Standard Specifications for Highway Bridges, with revisions by Caltrans, unless specified otherwise in these standards.

When the Service Load Method of design is allowed, the design live load shall be HS20-44 and alternate loading.

All structures designed with the Load Factor Design (LFD) criteria shall apply the permit design live loads ("P" loads).

All bridge plans shall show General Notes containing a statement as to the criteria for design, either AASHTO Service Load or AASHTO Load Factor. In addition, as a minimum, the design live loads, allowable and design footing pressure, pile design load, and allowable design stresses for reinforced concrete, prestressed concrete or structural steel, shall be shown.

The width of all new highway bridges, shall equal the full width of the traveled way and additional width as required by AASHTO. The width shall be measured normal to the centerline between vertical faces of curb, parapet or rail. When curbs are provided on the approach roadway, they should be carried across the structure without vertical or horizontal deviation.

Vertical and horizontal clearances for traffic ways under bridges shall comply with the current AASHTO standards.

Allowable bridge materials are:

1) Structural Steel
2) Reinforced Concrete
3) Treated Timber*

*Allowed for driveways only.

a. Bridge Railings

All bridges, culverts, retaining walls or other structures will be reviewed for installation of protective railings.

The railing will conform to current applicable AASHTO, OSHA, or Caltrans standards for geometric layout and design standards.

b. Foundation Investigation for Design

A foundation investigation by an engineering geologist or civil engineer will generally be required at all bridge sites. This requirement may be waived by the Director of Public Works if site conditions show the report to be unnecessary.

All reports shall contain recommendations by the civil engineer or engineering geologist for specific design considerations for the site. Soil support values, pile tip elevations, and point of fixity or piles with extensions should be included.

When required by the Director of Public Works, the foundation report shall also contain the following information:

1) Maximum credible rock acceleration
2) The magnitude of the maximum credible event
3) Depth to "rock-like" material

c. Private Bridges (Driveways Only)

All bridges require submission of plans and calculations (prepared by a civil engineer with a current valid registration in the State of California) to the County Department of Resource Management's Building Division for issuance of a building permit.

For all permanent structures, foundations shall be constructed of masonry or concrete and, in all cases, extend below the frost lines as provided for in Section 2907 of U.B.C. Other types of foundation materials may be permitted upon submission of acceptable test data, calculations, or other information relating to the properties and load-carrying capacity of such material. Section 2517 (c), U.B.C., provides for treated timber for the support of permanent structures embedded or in direct contact with the earth. The remainder of the bridge may be constructed of any material suitable for the structural capacity.

The minimum clear width should be ten (10) feet serving one lot only and fourteen (14) feet serving two lots. The minimum vertical clearance, over the roadway, should be fourteen (14) feet. These dimensions are necessary to accommodate the legal width and height for vehicles in California.

The minimum design live load should be as required by the Fire Safety Standards but in no case less than the minimum loading of AASHTO H-15-44.

For all pedestrian bridges, the design live load should be as recommended by AASHTO at 85 pounds per square foot of walkway area.

15. Embankment Guardrail

Embankment guardrail shall be designed in accordance with the height and slope of the embankment or sidehill as shown in Appendix 2-5, Equal Severity Curve. Where guardrail is required, the embankment shall be widened to accommodate the guardrail flare as shown in Caltrans Standard Plans, dated July 1992, Std. Plan No. A77F.

16. Horizontal Distance To Fixed Object

a. On new alignments with existing fixed objects on rural County roads (without sidewalks), the minimum horizontal clearance on tangent sections from the edge of pavement to the fixed object shall be six feet. All effort should be made to exceed this minimum. Objects at or near the ends of horizontal curves may have to be relocated to increase this minimum distance.

b. On new alignment with no existing fixed objects on rural County roads (without sidewalks) the minimum horizontal clearance from the edge of pavement to the fixed object shall be beyond the catch point of the roadside ditch or beyond the catch point of the fill slope, but in no case, less than 10 feet.

F. DRAINAGE

1. Required Information

Storm drain improvements submitted for review and approval shall include the following information:

a. Complete engineering calculations for each drainage basin.

b. Culvert diameter, type, gauge or class, length, slope, inlet and outlet elevation, station, skew, and minimum cover.

2. Culverts and Storm Drains

a. Culverts under driveway entrances for roadside ditches shall be adequate to carry the design flow, but shall be not less than 12" inside diameter.

b. Culverts crossing streets shall be of a size adequate to carry the design flow, but not less than 15" inside diameter for concrete and 18" for CMP.

c. Culverts under roadway embankment shall extend a minimum of 2 feet beyond the toe of the embankment.

d. Culverts for use outside the roadway may be of any county approved type and strength to meet field conditions. CMP shall have a minimum thickness of 0.052 inches (18 GA.).

e. Culverts in the roadway shall be designed to standard HS20-44 live load and shall have a design life of 25 years. CMP shall have a minimum wall thickness of 0.064 inches (16 GA.).

Soil resistivity tests by a private soils laboratory shall be performed to determine the appropriate culvert to be used. The engineer's calculations and the laboratory tests shall be submitted with the initial submittal of the improvement plans. If other evidence is available (existing culvert history in the area for example), it may be used in lieu of the resistivity tests at the discretion of the Director of Public Works.

f. The minimum cover, as measured from the top of the culvert to subgrade, shall be one foot for culverts crossing streets and zero feet for culverts under driveways. The minimum cover, as measured above, for culverts crossing streets may be reduced to zero feet when a Class "C" concrete backfill is used to support the middle third of the culvert diameter.

g. All drainage structures shall be standard Department of Public Works structures or as approved by the Director of Public Works. Inlet and outlet capacity shall be equal to the design flow.

See Section G, "Construction Standards," paragraph 16, of these Development Standards for areas requiring City of Redding standards.

h. Storm drains shall be provided where capacity of the street is less than the design storm or where the product of the velocity in feet per second times the depth of flow in feet exceeds six.

i. The maximum allowable headwater depth (HW/D) as measured from the flow line of the culvert, shall not exceed 2.5.

j. The use of high density polyethylene corrugated pipe is approved for use under the following conditions:

1) Corrugated high density polyethylene pipe, in sizes 12 to 36 inches in diameter, shall meet the requirements of AASHTO Designation: M-294. Type S, outer corrugated pipe wall and smooth inner liner, may be used

within the roadway prism or under driveway approaches, and where the application is approved by the Director of Public Works.

2) Maximum allowable fill heights over culverts, pending further study by Caltrans, shall be limited to 11 feet for all size.

3) Excavation and backfill shall conform to the requirements of Caltrans Standard Specifications, Section 19-3, and as shown for metal pipe on Standard Plan A62F.

4) The couplings shall be corrugated to match the pipe corrugations and the width shall not be less than 1/2 the nominal diameter of the pipe. Split couplings shall engage an equal number of corrugations on each side of the pipe joint.

5) The minimum depth of cover below finish subgrade shall be two (2) feet under County maintained roads.

6) The material shall not be used under driveway encroachments unless the ends are protected by a rigid material such as a concrete headwall.

7) Storm drain culvert ends shall be protected with concrete headwalls at all locations where mechanical cleaning of ditches or culvert entrances will be necessary.

k. The maximum length of pipe between cleanout access points shall be 200 feet for culverts having a diameter smaller than 24 inches and 300 feet for those having a diameter of 24 inches or larger. Manholes may also be required at other points. See Section 838.5 of the Caltrans Highway Design Manual for examples.

3. Valley Gutters

Valley gutters may be provided to carry drainage across intersections whenever underground drainage facilities cannot be reasonably provided. Valley gutters shall not be permitted on arterial, collector, subcollector, and major local streets.

4. Channels

Developments requiring street sections with curb and gutter shall be constructed with underground drainage facilities or formed and finished reinforced concrete lined ditches.

All open ditches having a top width 10 feet or more shall be designed in an easement wide enough to allow motor vehicles on one side. The access must be at least 10 feet wide. This requirement may be waived when, in the opinion of the Director of Public Works, access will not be needed for future maintenance and when, in the opinion of the Director of Environmental Health, access is not needed for mosquito control.

The gradient for earth ditches shall not be less than 0.7%. The gradient for lined or paved ditches and gutters shall be not less than 0.25%. Ditches shall be paved or lined when the design velocity exceeds that shown below. Ditches adjacent to the roadway section shall be paved with a dike and downdrains as required by the Director of Public Works.

New unlined drainage ditches or relocated natural drains may not be installed closer than 50 feet to the existing or proposed leach lines.

PERMISSIBLE VELOCITIES FOR UNLINED CHANNELS		
TYPE OF MATERIAL IN EXCAVATION SECTION	PERMISSIBLE VELOCITY (FEET PER SECOND)	
	INTERMITTENT FLOW	SUSTAINED FLOW
Fine Sand (Noncolloidal)	2.5	2.5
Sandy Loam (Noncolloidal)	2.5	2.5
Silt Loam (Noncolloidal)	3.0	3.0
Fine Loam	3.5	3.5
Volcanic Ash	4.0	3.5
Fine Gravel	5.0	4.0
Stiff Clay (Colloidal)	6.0	4.5
Graded Material (Noncolloidal)		
Loam to Gravel	6.5	5.0
Silt to Gravel	7.0	5.5
Gravel	7.5	6.0
Coarse Gravel	8.0	6.5
Gravel to Cobbles (Under 6 Inches)	9.0	7.0
Gravel and Cobbles (Over 8 Inches)	10.0	8.0

STANDARDS FOR CHANNEL LISTINGS			
MEAN VELOCITY (FEET PER SECOND)	THICKNESS OF LINING (INCHES)		MINIMUM REINFORCEMENT *
	SIDES	BOTTOM	
ASPHALT CONCRETE			
Less than 5	2	2-3	None
5-10	3	3-4	None
PORTLAND CEMENT CONCRETE **			
Less than 10	3-3½	3½-4	#3 bars @ 18" centers both ways
10-15	4-5	5-6	#3 bars @ 15" centers both ways
15 or More	6 or More	7 or More	#3 bars @ 12" centers both ways

*For small 'V' ditch or trapezoidal concrete lined channels less than 3' deep and 8' wide, minimum reinforcement shall be welded wire fabric 6x6-10x10.

**Air Blown Mortar may be substituted for Portland Cement Concrete where construction complies with Caltrans specifications.

5. Drainage Release

Whenever surface water is discharged from a project's boundaries and the location or method of discharge has been changed, or where the rate of discharge has been increased, the engineer of work shall investigate the impact of such on the downstream property owners. Said investigation shall include all properties affected through to the point where the surface waters collect into a defined water course. Whenever the engineer determines that the proposed change in surface water runoff has the potential to do damage or where the downstream facilities are not adequate to handle the runoff, the improvement plans shall include the work necessary to mitigate the impact of the change. If the engineer determines that there is no potential for downstream damage and/or that the downstream facilities are adequate, a statement of such shall appear on the improvement plans.

In addition to the above, it will be the developer's responsibility to obtain and record all easements and/or releases necessary to perform or facilitate the work.

6. Design Criteria

The hydrology analysis criteria shall be used to determine stream flow rates and run off volumes.

This method is applicable to all uncontrolled streams regardless of watershed size or watershed condition. It should not be used where run off is significantly affected by reservoirs or diversions nor where sufficient (20 years or more) stream flow data exists to permit use of standard statistical methods.

Once the stream flow rate and run off volumes have been established, the required drainage facilities shall be designed using accepted engineering practices. Where charts or tables are used, copies shall be submitted.

All bridges shall be designed to pass a storm with a 100-year design frequency. Minimum freeboard at bridges will be 2 feet at minor streams and 3 feet at major streams or at sites where stream debris is probable.

COUNTY OF SHASTA
DEPARTMENT OF PUBLIC WORKS AND WATER AGENCY

HYDROLOGY ANALYSIS FOR SMALL WATERSHEDS

PROJECT NAME_____ SHEET _____ OF _____

DRAINAGE AREA NO. _____ SCALE_____ CALC. BY _____ DATE _____

SOURCE_____ CK'D. BY _____ DATE _____
(Attach Copy)

STEP I - WATERSHED DATA

(a)	TOTAL DRAINAGE AREA (A)	A= ac.	=	A=	$mi.^2$
(b)	LENGTH OF WATERSHED (L)	L= ft.		L=	mi.

(c) ELEV. OF HIGHEST POINT IN WATERSHED (E_h)=_____ft.

(d) ELEV. OF LOWEST POINT IN WATERSHED (E_l)=_____ft.

(e) HEIGHT OF WATERSHED (H) = $E_h - E_l$ H= ft.

STEP II - SELECT DESIGN FREQUENCY

(a) CHECK APPROPRIATE BOXES	(b) BOXES CHECKED	USE
1. ☐ A<40ac.	(1) only	10 year design ☐
2. ☐ 40ac.≤A≤4 $mi.^2$	(2) only or (1 and 4) or (1 and 5)	25 year design ☐
3. ☐ A>4 $mi.^2$	(3) or (6) or (2 and 5)	100 year design ☐
4. ☐ Streets with curb and gutter		
5. ☐ Roadway fills exceed 10 feet		
6. ☐ Sumps or retention ponds		

STEP III - FIND (T_C)

(a) FOR NATURAL DRAINAGE BASINS WHERE A>4 $mi.^2$

$$T_c = \frac{11.9L^{3}_{mi}}{H_{ft}}^{0.385} = \_\_\_\_\_$$

(b) ALL OTHER BASINS

$$T_c^{②} = \frac{K^{①}}{60}\left(\frac{L^3_{ft}}{H_{ft}}\right)^{0.20} = \_\_\_\_\_$$

T_C = hrs.

① K = Land use constant (see attachment no. 1)
② Use 5 minute minimum

STEP IV - FIND WEIGHTED ($\bar{C}\bar{N}$) CURVE NUMBER

(a)

SOIL SYMBOL①	HYDROLOGIC SOIL GROUP②	LAND USE③	AREA④ ac.	CN③	AREA X CN

TOTALS $\sum$ A = _____ $\sum$A X CN =

(b) $\bar{C}\bar{N} = \frac{\sum(A \times CN)}{\sum A}$ = _____ . . . . . $\bar{C}\bar{N}$ =

① From "Soil Survey of Shasta County Area, Ca., "by the U.S. Dept. of Agriculture, S. C. S. and F. S., Aug. 1974.

② See attachment no. 2

③ See attachment no. 3

④ Include copy of soil survey map with soil boundaries delineated or other appropriate documentation.

STEP V - FIND RUNOFF VOLUME V_{24-D})

(a) P_{6-D} (6 hour precipitation) ① = _____ $\frac{P_{6-D}}{P_{24-D}}$ = $\frac{P_{6-D}}{P_{24-D}}$ =

(b) P_{24-D} (24 hour precipitation) ② = _____ P_{24-D}

(c) R_{24-D} ③ . . . . . R_{24-D} = in.

(d) V_{24-D} (Total volume of runoff) = R_{24-D} X $\frac{A \text{ ac.}}{12}$ V_{24-D} = ac-ft.

① See attachment no's 4 thru 6

② See attachment no's 7 thru 9

③ See attachment no's 10 and 11

STEP VI - FIND PEAK FLOW RATE (Q) @ T_C

(a) SELECT CURVE TYPE ①

☐ 1A $\frac{P_{6-D}}{P_{24-D}} < 0.518$ ☐ 1 $0.518 \leq \frac{P_{6-D}}{P_{24-D}} \leq 0.639$ ☐2 $0.639 < \frac{P_{6-D}}{P_{24-D}} \leq .767$

(b) CALCULATE CURVE PARAMETER (CP)

$CP = \frac{\frac{200}{CN} - 2}{P_{24-D}}$ = _____ . . . . . CP =

(c) FIND UNIT FLOW RATE (q)① . . . . . q = csm/in

(d) $Q = q \times A_{mi}2 \times R_{24-D}$ = _____ . . . . . Q = CFS

① See attachment no's 12 thru 14

ATTACHMENT NO. 1

HYDROLOGY ANALYSIS
FOR
SMALL WATERSHEADS
INTERPOLATION CHART

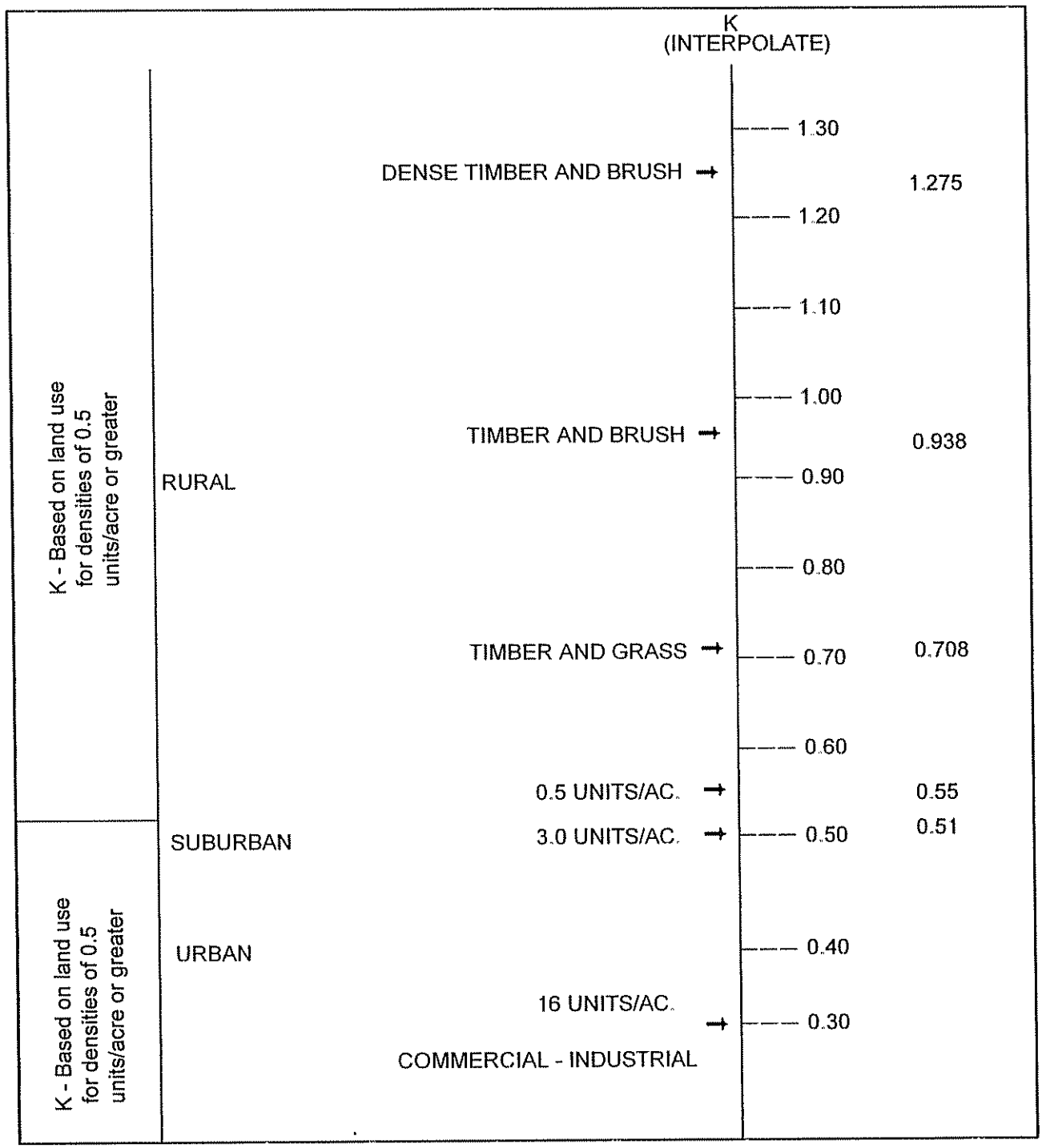

NOTE: Use current General Plan designations to determine ultimate development pattern of area.

For drainage areas with subareas of different development types, Tc should be calculated by summing the Tc of each subarea.

ATTACHMENT NO. 3

HYDROLOGY ANALYSIS
FOR
SMALL WATERSHEDS

"CN" RUNOFF CURVE NUMBERS FOR HYDROLOGIC SOIL-COVER COMPLEXES IN SHASTA COUNTY

LAND USE [3]		HYDROLOGIC SOIL GROUP [2]			
		A	B	C	D
Irrigated pasture		32	58	72	79
Annual grass		38	61	75	81
Broadleaf chaparral		31	57	71	78
Meadow		30	58	72	78
Open brush		41	63	75	81
Woodland-grass		32	58	72	79
Woods (Woodland)		27	55	70	77
Barren		77	86	91	93
Urban Land [1]					
Average Lot size	Average % Impervious				
⅛ acre	65	77	85	90	92
¼ acre	38	61	75	83	87
⅓ acre	30	57	72	81	86
½ acre	25	54	70	80	85
1 acre [1]	20	51	68	79	84
Commercial and business area (85% impervious)		89	92	94	95
Open spaces, lawns, parks, golf courses, cemeteries		39	61	74	80
Industrial districts (72% impervious)		81	88	91	93
Paved parking lots, roofs, driveways		98	98	98	98
Streets and roads					
Paved with curbs and storm sewers		98	98	98	98
Gravel and hard surface		76	85	89	91
Dirt		72	82	87	89

[1] For urban lands with lots greater than 1 acre, use native cover.

[2] Where hydrologic soil group is not known, use group D.

[3] All facilities shall be designed based on ultimate land use using current general plan densities for the entire drainage area.

SUPPLEMENT TO

ATTACHMENT NO. 3

HYDROLOGY ANALYSIS
FOR
SMALL WATERSHEDS

DESCRIPTIONS OF LAND USE COVER TYPES

Irrigated pasture - Irrigated land that is planted to perennial grasses and legumes for production of forage and which is cultivated only to establish or renew the stand of plants. For hydrologic purposes, dryland pasture is considered as annual grass.

Annual grass - Areas on which the principal vegetation consists of annual grasses and weeds.

Broadleaf chaparral - Areas where the principal vegetation consists of evergreen shrubs with broad, hard, and stiff leaves. The brush cover is usually dense or moderately dense.

Meadow - Areas with seasonally high water tables, locally called cienegas, on which the principal vegetation consists of sod-forming grasses and other plants.

Open brush - Areas on which the principal vegetation consists of soft-woody shrubs which are grayish in color. It also includes vegetation on desert-facing slopes where Broadleaf chaparral species predominate in an open shrub cover.

Woodland-grass - Areas with an open cover of broadleaf or coniferous trees and with the intervening ground space occupied by annual grasses or weeds. The trees may occur singly or in small clumps. Canopy density, the amount of ground surface shaded at high noon, is from twenty to fifty percent.

Woods (Woodland) - Areas where coniferous or broadleaf trees predominate. The crown or canopy density is at least 50 percent. Open areas may have a cover of annual or perennial grasses or of brush. Herbaceous plant cover under the trees is usually sparse because of leaf or needle litter accumulation.

Barren - Areas with no, or practically no, plant cover; where 15 percent or less of the ground surface is protected by plants or litter. This includes rocklands, land destroyed by erosion, and shaped or graded land.

Urban Land - Urban, industrial, roads, open space, and other lands where the amount of pavements and other impervious surfaces significantly effect the runoff. Individual items are not discussed here as the table is fairly complete.

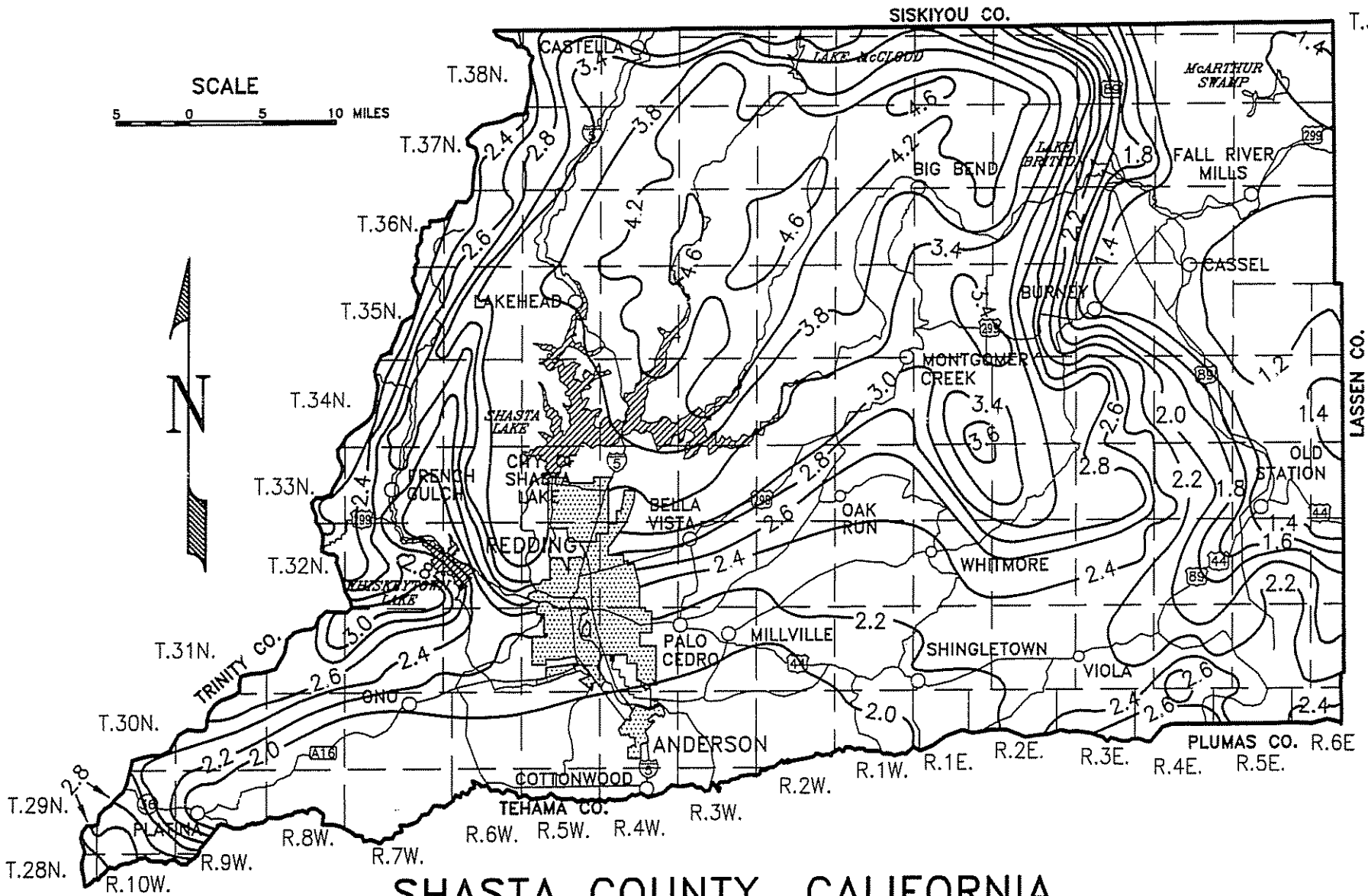

SHASTA COUNTY, CALIFORNIA

ATTACHMENT No. 4

10 YEAR – 6 HOUR PRECIPITATION
ISOPLUVIALS IN INCHES

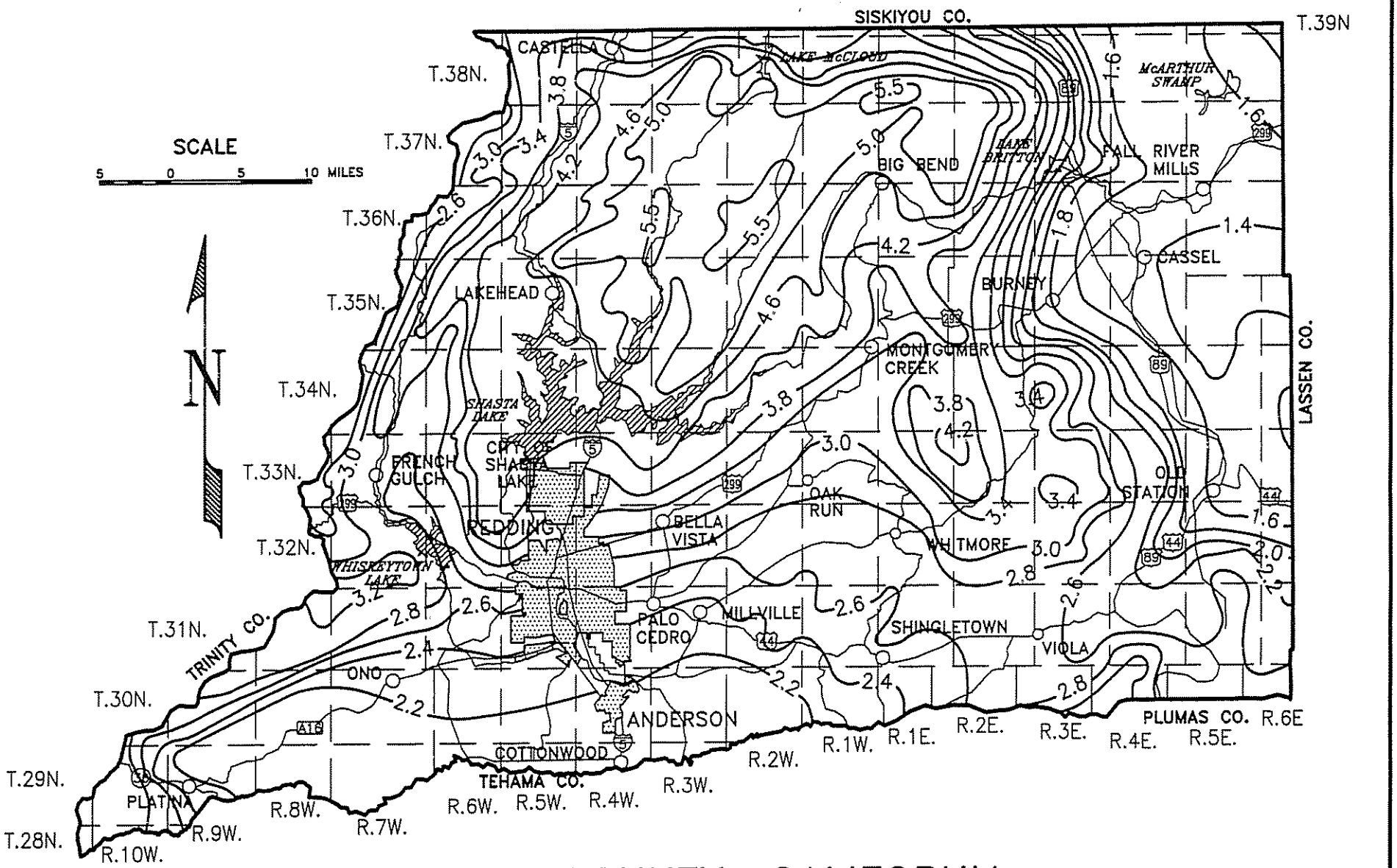

SHASTA COUNTY, CALIFORNIA

ATTACHMENT No. 5

25 YEAR – 6 HOUR PRECIPITATION
ISOPLUVIALS IN INCHES

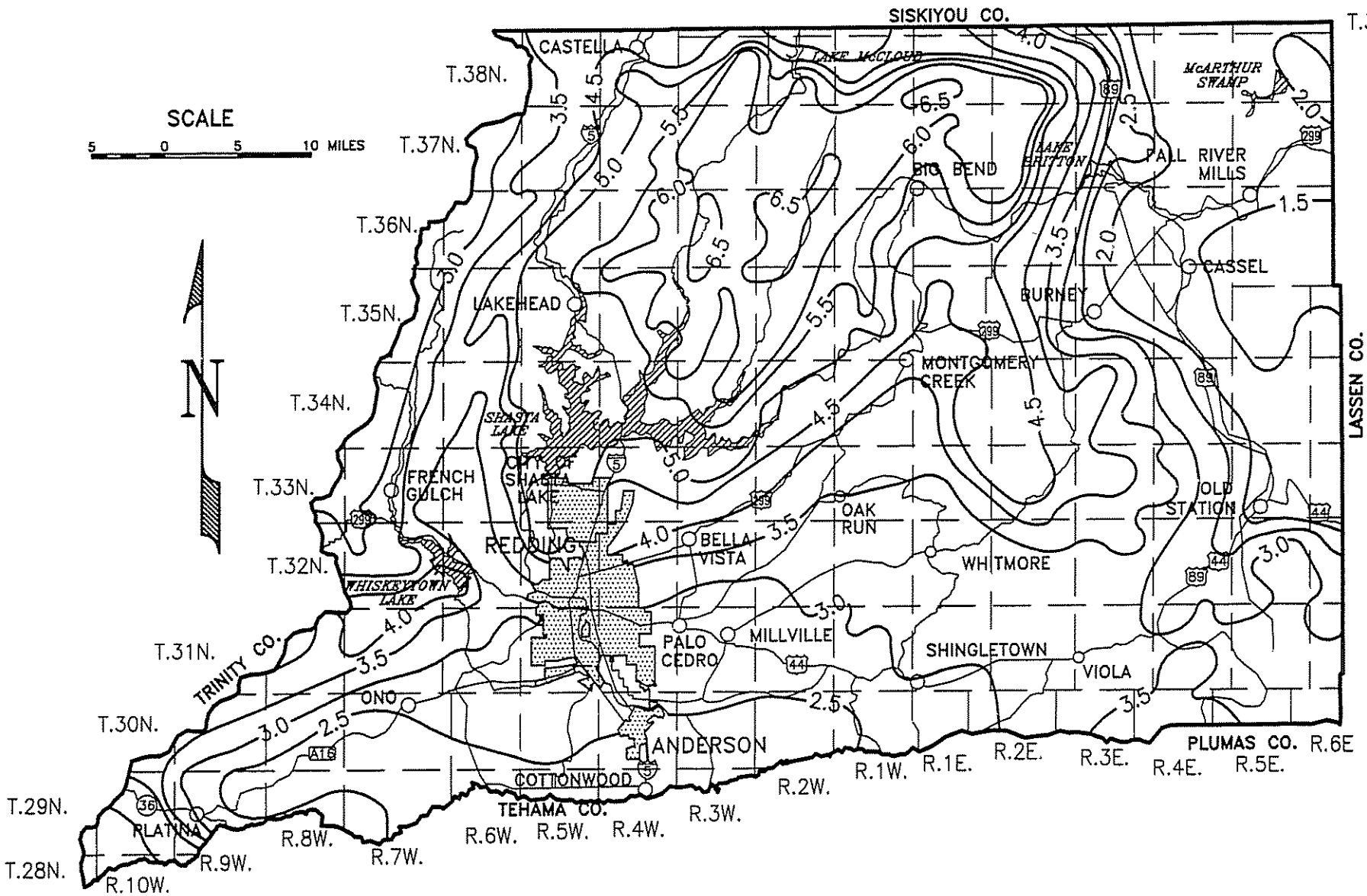

SHASTA COUNTY, CALIFORNIA

ATTACHMENT No. 6

100 YEAR – 6 HOUR PRECIPITATION
ISOPLUVIALS IN INCHES

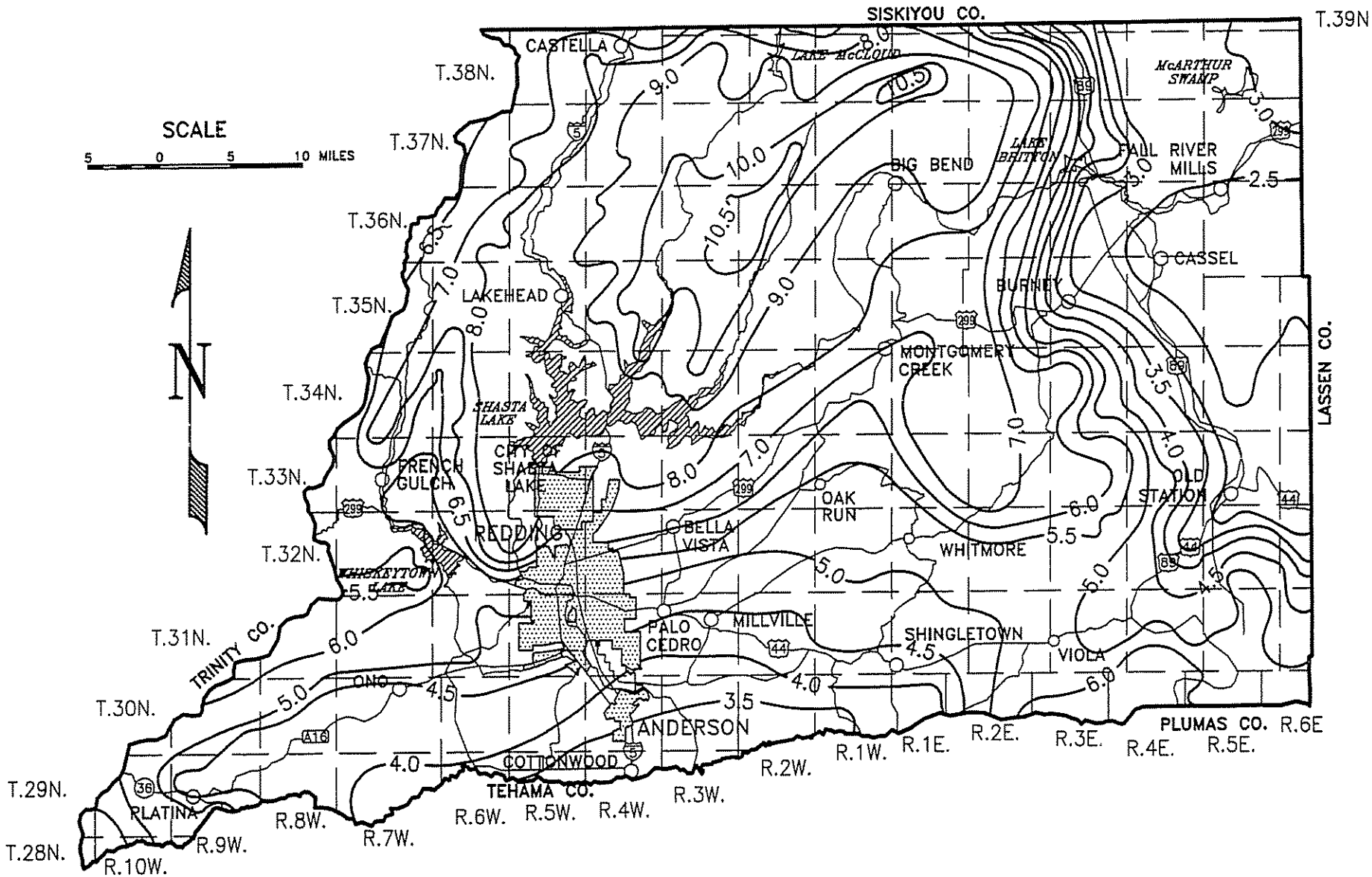

SHASTA COUNTY, CALIFORNIA

ATTACHMENT No. 7

10 YEAR – 24 HOUR PRECIPITATION
ISOPLUVIALS IN INCHES

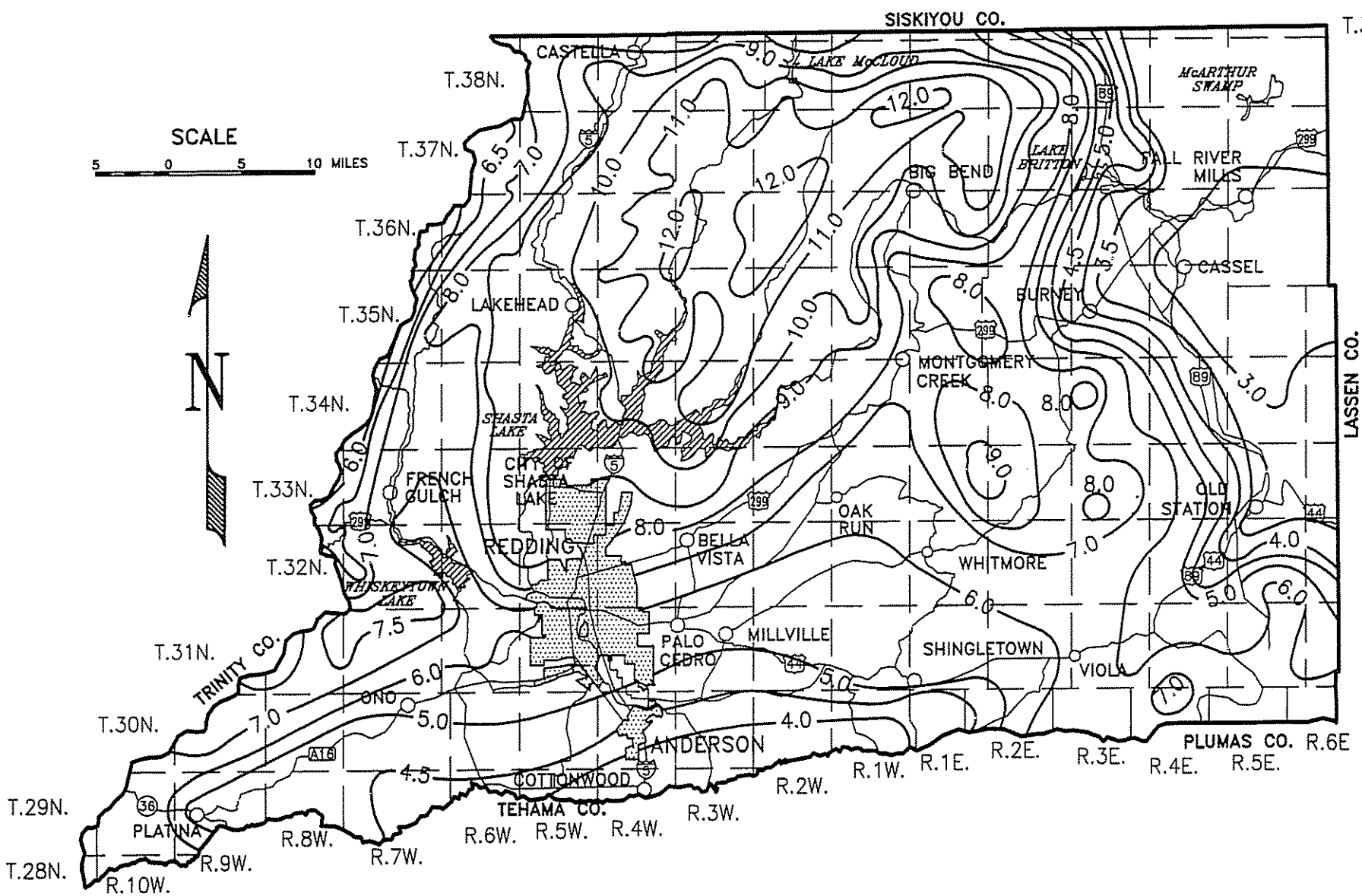

SHASTA COUNTY, CALIFORNIA

ATTACHMENT No. 8

25 YEAR – 24 HOUR PRECIPITATION
ISOPLUVIALS IN INCHES

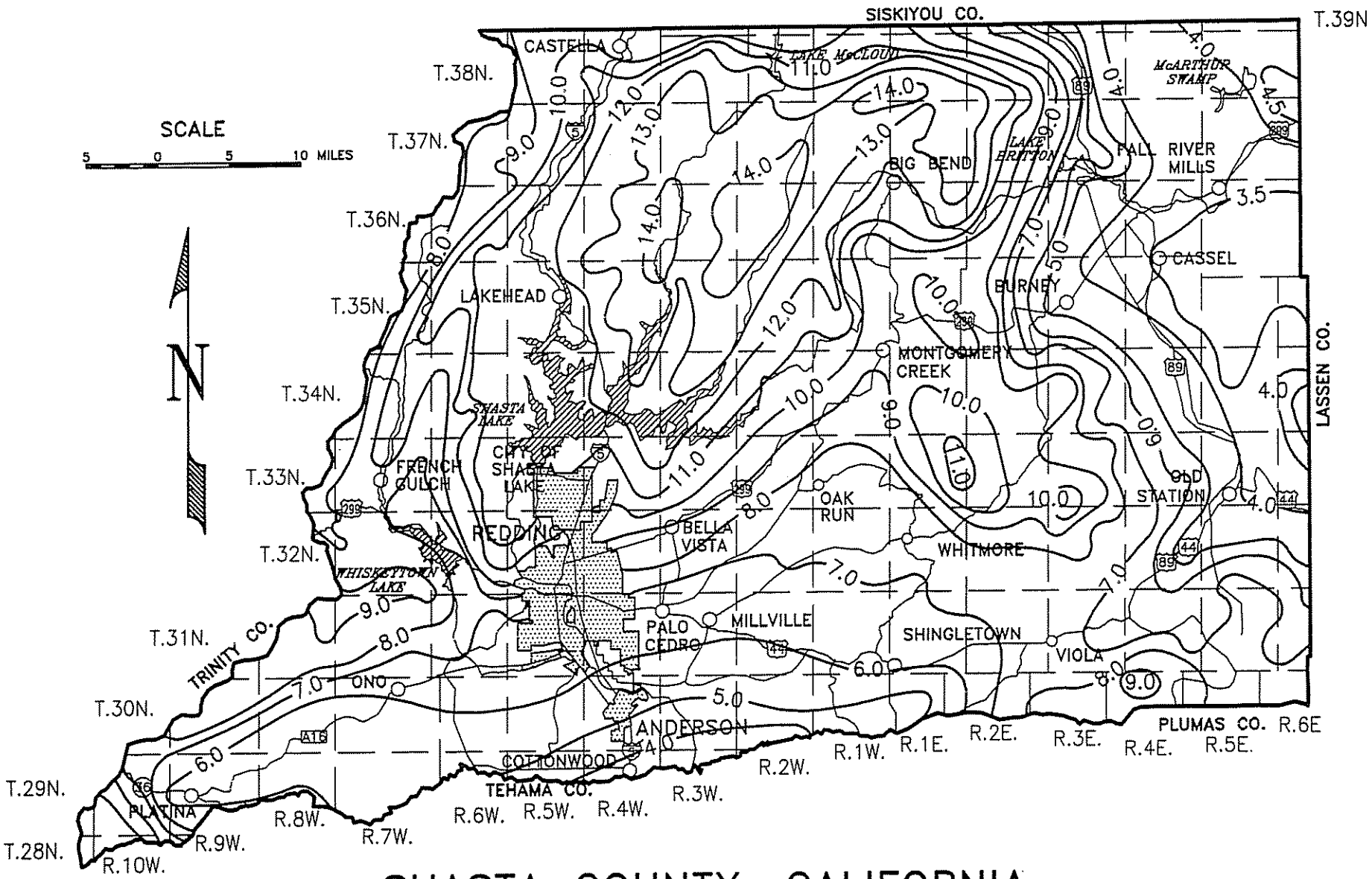

SHASTA COUNTY, CALIFORNIA

ATTACHMENT No. 9

100 YEAR – 24 HOUR PRECIPITATION
ISOPLUVIALS IN INCHES

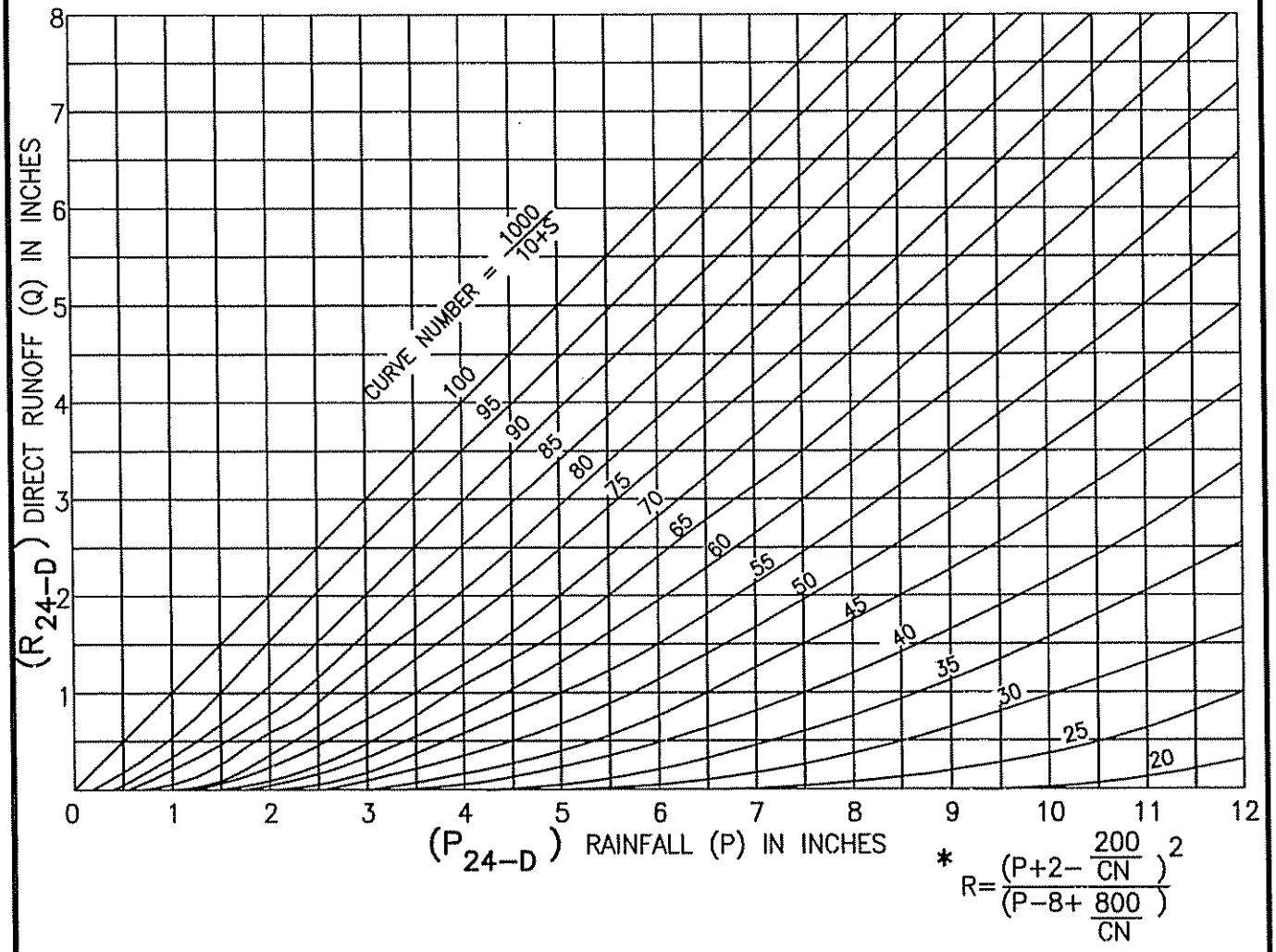

SCALE: NTS	DATE: 1996	SHASTA COUNTY DEPARTMENT OF PUBLIC WORKS	
		APPROVED BY: William E. Lyman	***HYDROLOGY ANALYSIS*** FOR ***SMALL WATERSHEDS***
MARK	DATE / REVISION	WILLIAM E. LYMAN	ATTACHMENT No. 10

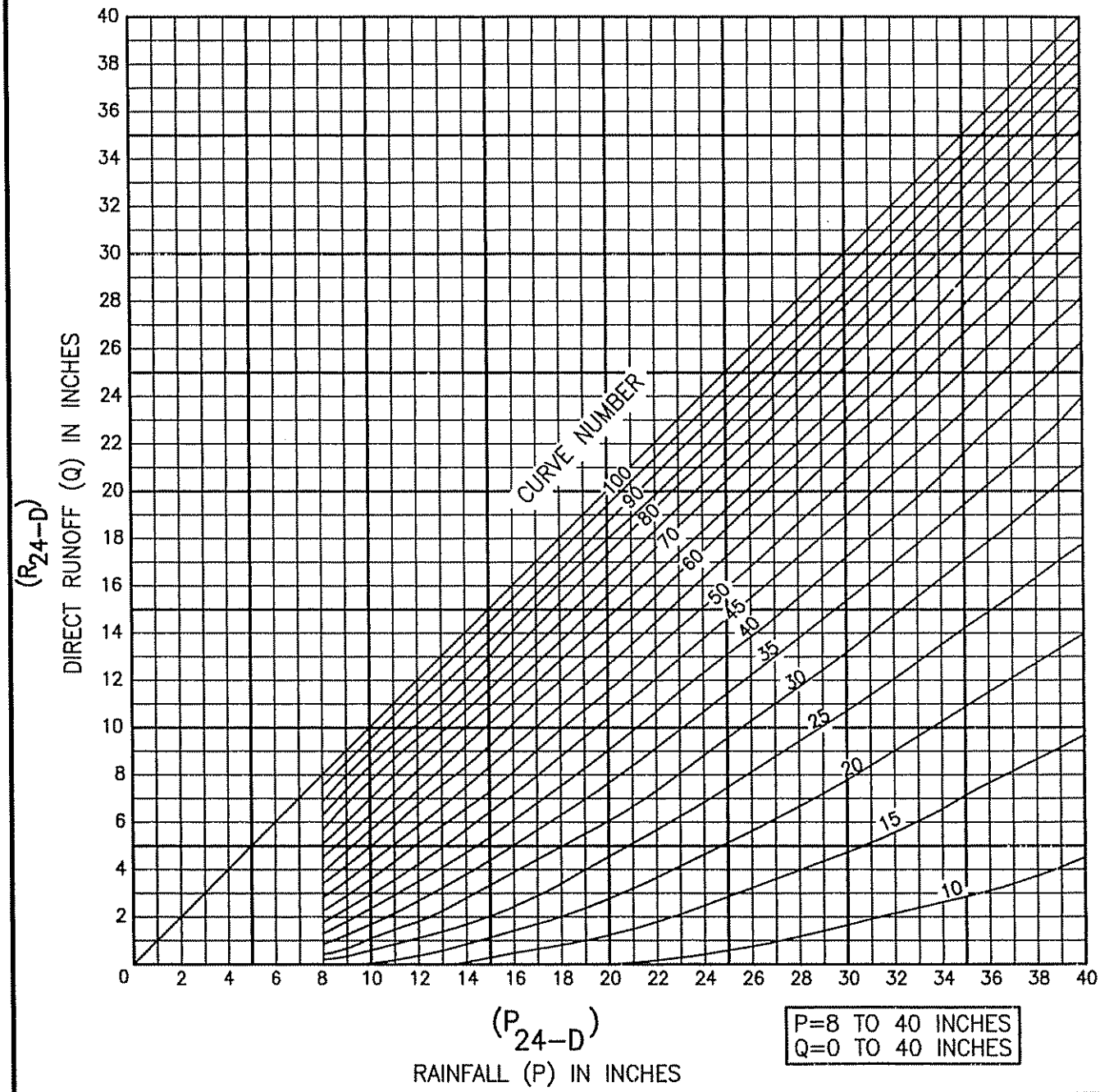

SCALE: NTS	DATE: 1996	SHASTA COUNTY DEPARTMENT OF PUBLIC WORKS
MARK / DATE / REVISION	APPROVED BY: William E. Lyman WILLIAM E. LYMAN	***HYDROLOGY ANALYSIS*** FOR ***SMALL WATERSHEDS*** ATTACHMENT No. 11

TYPE 2 CURVES FOR $0.639 \leq \frac{P_{6-D}}{P_{24-D}} \leq 0.767$

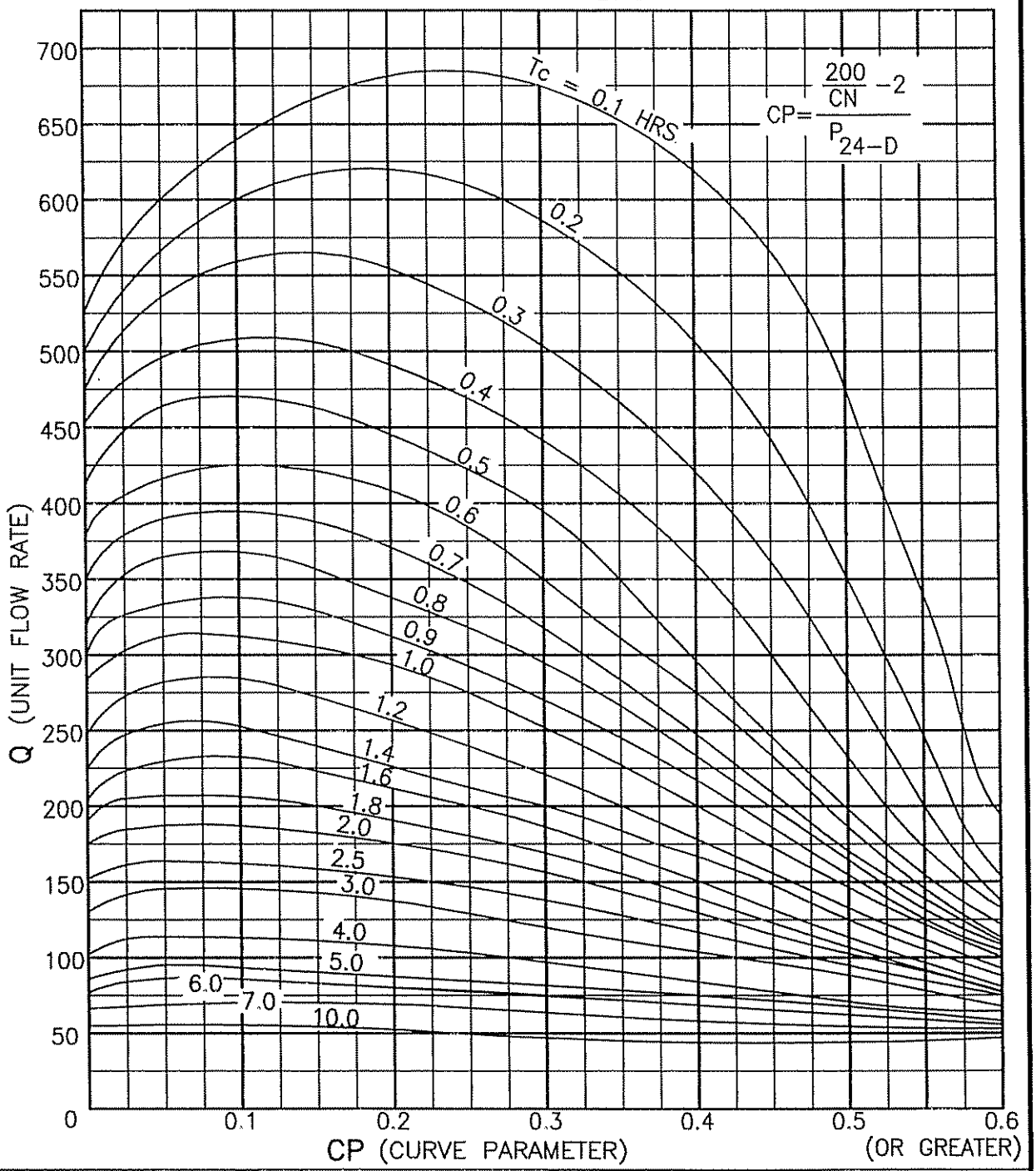

SCALE: NTS	DATE: 1996	SHASTA COUNTY DEPARTMENT OF PUBLIC WORKS	
		APPROVED BY: William E. Lyman	***HYDROLOGY ANALYSIS*** FOR ***SMALL WATERSHEDS***
MARK	DATE	REVISION	WILLIAM E. LYMAN	ATTACHMENT No. 12

$$CP = \frac{\frac{200}{CN} - 2}{P_{24-D}}$$

TYPE 1A CURVES FOR $\frac{P_{6-D}}{P_{24-D}}$ <0.518

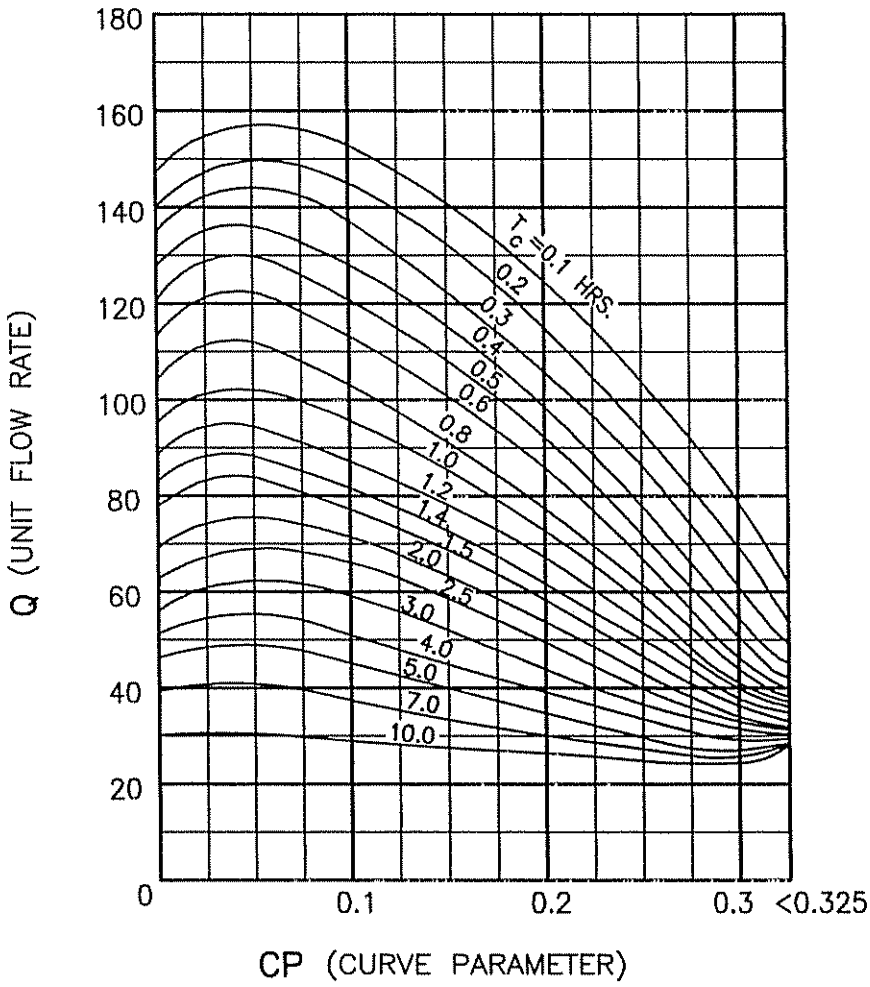

SCALE: NTS	DATE: 1996	SHASTA COUNTY DEPARTMENT OF PUBLIC WORKS
MARK / DATE / REVISION	APPROVED BY: William E. Lyman WILLIAM E. LYMAN	***HYDROLOGY ANALYSIS*** FOR ***SMALL WATERSHEDS*** ATTACHMENT NO. 13

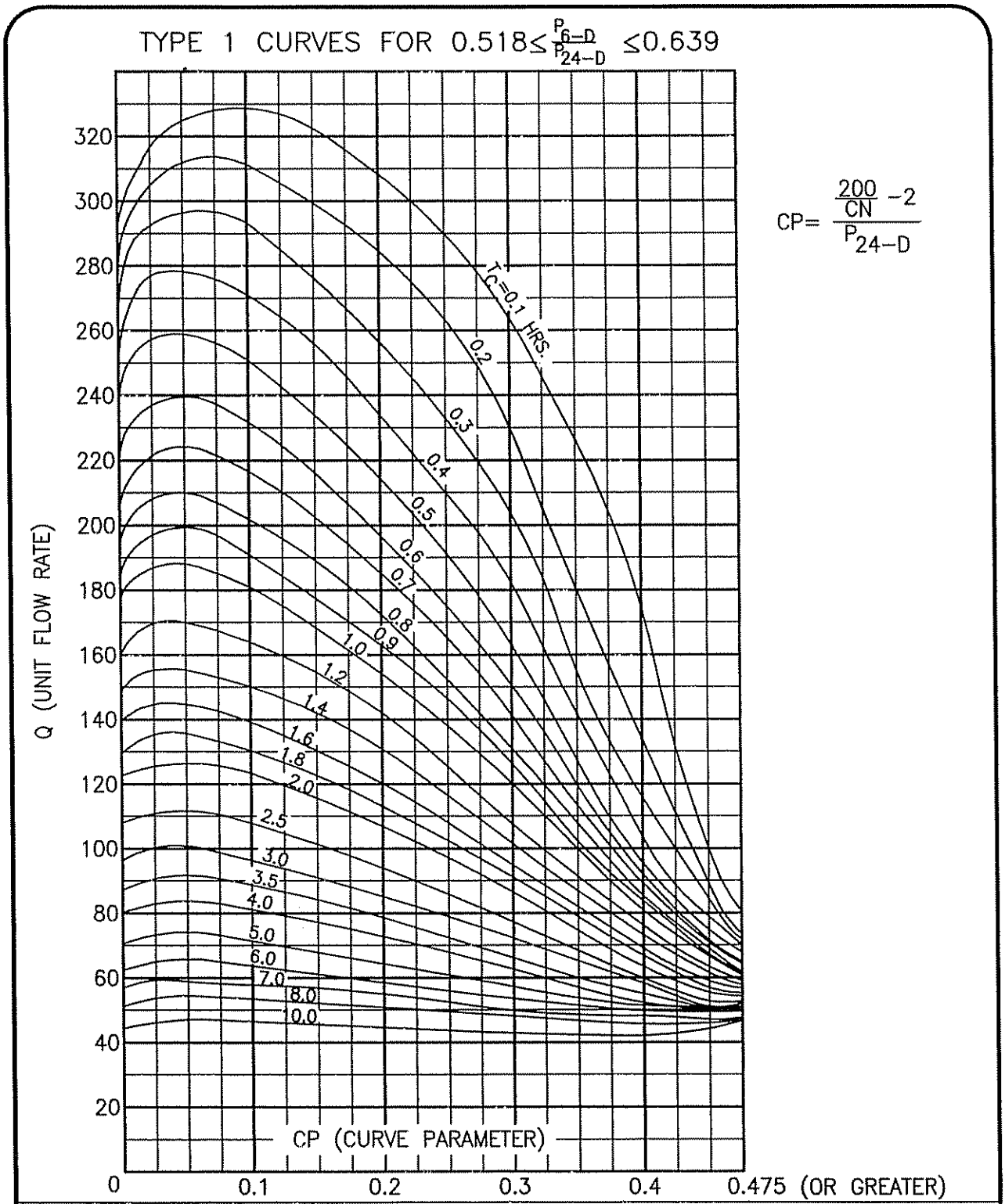

SCALE: NTS	DATE: 1996	SHASTA COUNTY DEPARTMENT OF PUBLIC WORKS
MARK / DATE / REVISION	APPROVED BY: William E. Lyman, WILLIAM E. LYMAN	***HYDROLOGY ANALYSIS*** FOR ***SMALL WATERSHEDS*** ATTACHMENT No. 14

G. CONSTRUCTION STANDARDS

1. Standard Specifications

The current edition of the "Standard Specifications" of the State of California, Business and Transportation Agency, Department of Transportation, are the Standard Specifications of the County of Shasta. Said Specifications are to be read and interpreted as though the following substitutions of terms were made:

a. County of Shasta for the State;

b. The Board of Supervisors for Director of Transportation;

c. Department of Public Works of the County of Shasta for Department of Transportation;

d. The Director of Public Works of the County of Shasta acting either directly or through duly authorized agents for the Engineer;

e. The established laboratory of the Department of Public Works of the County of Shasta or laboratories authorized by the County to test materials and work involved in the contract for laboratory;

and the following SPECIAL PROVISIONS are to be added to the Specifications:

2. Requirements

Construction of improvements shall conform to the applicable provisions of the current Standard Specifications, the approved plans and Special Conditions, where directed or approved by the Director of Public Works, and these Shasta County Development Standards.

3. Control of Work

The Developer's Engineer shall set construction stakes, which shall include but not be limited to, initial control stakes, radius points, pipe grades, special ditch and centerline grades, and furnish adequate notes and copies of improvement plans that provide the contractor with sufficient information to construct the improvements and enable the County to check all work in the field. All work performed and materials incorporated therein shall be in strict conformance with the approved plans and specifications, and any change proposed must be approved by the Developer's Engineer and the County before it is incorporated in the work.

a. Permits - The developer shall obtain all necessary permits which may include, but are not limited to: encroachment permits for road, curb, gutter and sidewalk construction from Shasta County and from the California Department of Transportation; streambed alteration permit from the California Department of Fish and Game; and any other permits that may be applicable.

4. Trench Excavation and Backfill for Underground Utilities

All trench backfill between property lines in the street section shall conform to Chapter 7, Section D, "Technical Specifications for Trench Excavation, Backfill, and Surface Restoration," of these Development Standards. In all cases, the class of backfill to be used shall be approved by the County.

Underground utilities shall include, but not be limited to, water, sewer, telephone, power service, and cable television (if applicable).

5. Asphalt Concrete

Asphalt concrete surfacing shall be 1/2 inch maximum, Type "B", and shall conform to the typical Section and Plans and to the provisions of Section 39 of the Standard Specifications.

All asphalt concrete surfacing shall have a fog seal as specified in Section 37-1 of the Standard Specifications.

6. Aggregate Base

Aggregate base shall be Class 3 and shall conform to the provisions in Section 26 "Aggregate Bases," of the Standard Specifications and the details shown on the Plans.

Aggregate for Class 3 aggregate base shall be free from vegetable matter and other deleterious substances, and shall be of such nature that it can be compacted readily under watering and rolling to form a firm, stable base.

The coarse aggregate (Material retained on the No. 4 sieve) shall consist of material of which at least 25 percent by weight shall be crushed particles as determined by Test Method No. Calif. 205.

The percentage composition by weight of Class 3 aggregate base shall conform to the following grading when determined by Test Method No. Calif. 202, modified by Test Method No. Calif. 905 when there is a difference in specific gravity of 0.2 or more between the coarse and fine portion of the aggregate or between blends of different aggregates.

PERCENTAGE PASSING 3/4" MAXIMUM INDIVIDUAL TEST RESULTS		
SIEVE SIZES	MINERAL AGGREGATE	CINDERS *
1"	100	100
3/4"	90-100	90-100
No. 4	35-65	35-65
No. 30	5-35	5-37
No. 200	2-12	2-14

The aggregate base shall also conform to the following quality requirements:

TESTS	TEST METHOD NO. CALIF.	REQUIREMENTS INDIVIDUAL TEST RESULT
Resistance (R-value)[1]	310	78 min.
Sand Equivalent	217	27 min.
Durability Index	229	30 min.

* Where cinders are proposed to be used for Class 3 Base, they will be allowed only in choker sections which have a minimum of 2 feet of earth shoulder on each side of the roadway. Special Provision may be required in cut areas to release any trapped water in the roadway.

[1] The R-value requirement will be waived provided the aggregate base conforms to the specified grading and durability and has a Sand Equivalent value of 35 or more, except that the R-value requirement will not be waived for aggregates which have been treated with lime, cement of other chemical material.

7. Dust Control

The subdivider, or his representative, shall be responsible for preventing excessive dust nuisance during the construction operations of the subdivision. Attention is directed to Section 10 of the Standard Specifications.

8. Embankment Construction

All work involved in embankment construction shall conform to the applicable provisions of the Standard Specifications, except the relative compaction of the natural ground area shall be for a depth of six inches below the grading plane and shall not be less than 95%.

9. Excavating Below Grade

Care shall be exercised to prevent excavating below grade, and any areas excavated below grade shall be filled with suitable material and thoroughly compacted as approved by the County. All brush, roots and debris shall be removed from excavated ditch or channel.

10. Aggregate Subbase

Aggregate Subbase shall be Class 2 in conformance with the Standard Specifications.

11. Concrete

The design, proportioning and mixing of all concrete shall be approved by the Director of Public Works and in accordance with the applicable provisions of the Standard Specifications. Curb and sidewalk shall be constructed in accordance with the Standard Specifications.

12. Construction Debris

Brush and timber removed during the construction of roads or building sites shall be removed or otherwise disposed of prior to the following fire season.

Debris shall be disposed of according to the requirements of the County Department of Resource Management's Air Quality Management District.

13. Standard Construction Details

The Standard Construction Details on the following pages shall be used in all cases unless approval for the use of other details is obtained from the Director of Public Works.

14. Pipe Lines

Pipe lines for sewer, water and gas shall be installed in accordance with Chapter 7, "County Service Areas Sanitary Sewer and Water System Standards," of these Development Standards.

All pipe and other conduit shall be constructed so as to prevent leakage of water due to defective materials, improper joining, corrosion, impact, freezing or other causes.

All lines shall have trench excavation and backfill in accordance with Chapter 5, Section D, "Technical Specifications for Trench Excavation, backfill, and Surface Restoration," of these Development Standards.

15. Miscellaneous Items

Miscellaneous items not specifically covered in the Special Sections shall be constructed in accordance with the appropriate section of the Standard Specifications; or, if not covered by the Standard Specifications, shall be approved by the Director of Public Works.

16. City of Redding Standards

When developments are located within the General Plan Designations: UR, SR, C, I and MU, the current "City of Redding Public Works Construction Standards" and "Standard Specifications for Public Works Construction" shall be used, upon approval of County Director of Public Works, in lieu of County Construction Standards and Specifications. In addition, those developments located within the above General Plan designations and the City of Redding sphere of influence shall use reinforced concrete pipe in all storm drains.

17. Acceptance of Work

All work shall be inspected and approved by the County prior to final acceptance. The developer should make every effort to contact the County a minimum of 7 days prior to beginning work so that the County inspector can arrange his schedule accordingly. Failure to contact the County in a timely manner may cause undue delays in the final acceptance of the work.

18. Maintenance Bond Required

When newly constructed roads are proposed to be accepted into the County system of maintained mileage, the developer will be required to enter into an agreement with the County guaranteeing workmanship and materials for a minimum of one year. The developer will also be required to post a security acceptable to the County in an amount set by the County.

19. Construction Bond

Prior to filing a parcel map or a final map, all improvements required by the condition of approval shall be completed and approved or the developer will be required to enter into an agreement with the County guaranteeing to construct the improvements within one year. Also, the developer will be required to post a security acceptable to the County in an amount directed by the County.

20. Chip Seal

This work shall consist of an application of asphaltic emulsion followed with an application of screenings, and another application of asphaltic emulsion followed with another application of screenings.

Screenings shall be medium (3/8" x No. 6) or medium fine (5/16" x No. 8) and conform to the requirements of Section 37-1.02, "Materials," of the Standard Specifications. Asphaltic emulsion shall be LMCRS-2H grade with a liquid rubber latex additive or CRS-2H grade and shall conform to AASHTO requirements and the provisions in Section 94, "Asphaltic Emulsions," of the Standard Specifications.

Before applying asphaltic emulsion to an existing asphalt surface, all loose particles of paving, dirt and all other extraneous material shall be removed. When seal coats are to be applied to aggregate base, the base shall conform to the compaction requirements and be thoroughly dampened immediately before applying the first coat of asphaltic emulsion.

Asphaltic emulsion shall be spread at a uniform rate of between 0.35 and 0.40 gallon per square yard. Immediately following the application of the asphaltic emulsion, it shall be covered with screenings spread with a mechanical device which will spread the screenings at a uniform rate of between 20 and 30 pounds per square yard over the full width of the traffic lane in one application. After the screenings have been spread, any piles, ridges or uneven distribution shall be removed. Rolling shall consist of two complete coverages and shall begin immediately behind the spreader.

RECORDED AT REQUEST OF:
Shasta County Director of Public Works

WHEN RECORDED MAIL TO:
Shasta County Director of Public Works
1855 Placer Street
Redding, Ca 96001

NO FEE-COUNTY BUSINESS
GOV. CODE SEC. 6103
A.P. NO. ___-___-__
PROJECT: _____ No. _____

PUBLIC WORKS DEFERRED IMPROVEMENT AGREEMENT,
COVENANT AND CONSENT TO LIEN
FOR CURB, GUTTER AND SIDEWALK

This Agreement, Covenant, and Consent to Lien (the Agreement) is made and entered into by and between the County of Shasta (County), a political subdivision of the State of California, and Owner(s) _____.

WHEREAS, Owner, by (building permit) (encroachment permit) (use permit) subdivision) (parcel map) No. _____, is by the terms thereof, or by the County Development Policies and Standards or by County ordinance, required to [(1)] enter into a deferral agreement with Shasta County, prior to (issuance of the use permit) (recording the parcel map) (recording the final map) for an Encroachment Permit on) _____ (County Road No. _____) for (curb and gutter) (__ foot wide sidewalk), paving from edge of existing pavement to gutter, related drainage improvements, and any required relocation of utilities. Improvement plans prepared by a registered engineer shall be submitted to and approved by the Department of Public Works prior to issuance of the Encroachment Permit, and shall constitute a part of the deferral agreement. [(2)] construct at his sole cost, (curb and gutter), (and) (sidewalk), (necessary drainage facilities), (and the grading, placing of aggregate base and asphalt concrete) on the road frontage for _____, County Road Number _____.

[(ADD INSERT HERE)]

AND WHEREAS, County has determined that deferral of construction or installation of these improvements is appropriate under the circumstances existing at the time this agreement is executed;

NOW THEREFORE it is mutually agreed between County and Owner that:

a. Construction of the curb and gutter, sidewalks, drainage facilities, and road frontage may be deferred until such time as County notifies Owner, in writing, to proceed therewith.

b. Upon receipt of this notice, Owner shall, within 90 days, complete the construction of required curb and gutter, sidewalks, drainage facilities and road frontage. Improvements shall be constructed in accordance with the County policies, standards and ordinances in effect at the time of construction.

c. In the event of default by Owner, County is hereby authorized by Owner to cause the construction to be done and to charge the entire cost to Owner.

d. In the event of default by Owner and construction by County, the cost of the construction shall constitute a lien against all real property owned by Owners within Shasta County. If that cost is not paid by Owner within thirty (30) days after billing from County, Owner authorizes and requests County to file a notice of lien with the Shasta County recorder and to:

1. Add any cost of less than $100.00 to the next regular tax bill, or

2. Collect costs of $100.00 or more in two annual installments and payments of costs so deferred shall bear interest on the unpaid balance at the rate of seven percent per year.

e. Owner may prepay at any time and without penalty all or part of any unpaid costs charged against him.

f. Owner further agrees that this Agreement shall be acknowledged by him and recorded by the Department of Public Works in the office of the County Recorder of Shasta County, and that he executes this Agreement for himself, his heirs, successors and assigns, it being the intent of the parties to this Agreement that Owner's obligations shall be and are a covenant running with the land.

IN WITNESS WHEREOF, the parties have signed this Agreement this _____ day of _____, 19__.

By _____
_____, Owner

By _____
_____, Owner

COUNTY OF SHASTA

Date: _____

By _____
Director of Public Works

By _____
Assistant Director

AND WHEREAS, owner is the owner of certain real property described below:

That parcel of land as described in the deed recorded in Book ____ of Official Records at Page ____, Shasta County Records, being a portion of (Section _____ of the P. B. Reading Grant) Section ____, Township _____ North, Range _____ (West) (East), M.D.M., in the unincorporated territory of Shasta County, State of California.

ACKNOWLEDGEMENTS (Check those needed)

☐ Individual

☐ Corporation

☐ Partnership

☐ DPW

RECORDED AT REQUEST OF:
Shasta County Director of Public Works

WHEN RECORDED MAIL TO:
Shasta County Director of Public Works
1855 Placer Street
Redding, CA 96001

NO FEE-COUNTY BUSINESS
GOV. CODE SEC. 6103
A.P. NO. _____-_____-_____
PROJECT: U.P. ____-____

PUBLIC WORKS DEFERRED IMPROVEMENT AGREEMENT,
COVENANT AND CONSENT TO LIEN
FOR THE ASPHALT PAVING

This Agreement, Covenant, and Consent to Lien (the Agreement) is made and entered into by and between the County of Shasta (County), a political subdivision of the State of California, and Owners, _____.

WHEREAS, Owner, by (Use Permit) (Encroachment Permit) (Subdivision) (Parcel Map) No. _____-_____, is by the terms thereof, or by the County Development Policies and Standards or by County Ordinance, required to enter into a deferral agreement to pay his fair share for the future asphalt paving of the following described road:

Street name: _____
Construction Limits: _____
Required standard: _____ Paving Width _____

ADD INSERT HERE

AND WHEREAS, County does allow that deferral of construction of these improvements is appropriate under the circumstances existing at the time this agreement is executed;

NOW THEREFORE it is mutually agreed between County and Owner that:

a. Construction of the above may be deferred until such time as County notifies owner, in writing that an Assessment District is being formed.

b. When an Assessment District is formed to bring road into the County Road System, improvements shall be constructed in accordance with the County policies, standards and ordinances in effect at the time of construction. Owner further agrees to pay his fair share in the event an assessment district is formed.

c. Owner further agrees that this Agreement shall be acknowledged by him and recorded by the Department of Public Works in the office of the County Recorder of Shasta County, and that he executes this Agreement for himself, his heirs, successors and assigns, it being the intent of the parties to this Agreement that Owner's obligations shall be and are a covenant running with the land.

IN WITNESS WHEREOF, the parties have signed this Agreement this _____ day of _____, 19____.

By _____
_____, (Owner)

By _____
_____, (Owner)

COUNTY OF SHASTA

Date: _____

By William E. Lyman
Director of Public Works

By _____
Assistant Director

ADD ACKNOWLEDGEMENTS NEXT PAGE

☐ Individual
☐ Partnership
☐ Partnership
☐ DPW

AND WHEREAS, owner is the owner of certain real property described below:

That parcel of land as described in the deed recorded in Book ____ of Official Records at Page ____, Shasta County Records, being a portion of (Section _____ of the P. B. Reading Grant) Section ____, Township _____ North, Range _____ (West) (East), M.D.M., in the unincorporated territory of Shasta County, State of California.

ENGINEER'S CERTIFICATION OF
SPECIAL PURPOSE ROAD COMPLIANCE

The Tentative Map of Tract No. _____, _____ _____ Subdivision was approved by the Shasta County Planning Commission on _____ _____, 19___.

This map was approved utilizing the Special Purpose Road Standard described in Shasta County's Development Standards.

As a registered Civil or Traffic Engineer in California having errors and omissions insurance in a minimum amount of $500,000 coverage, I hereby certify that the roads in Tract No. _____ _____ were designed and constructed in accordance with the provisions of the Special Purpose Road Standards and the County Fire Safety Standards, and that the maximum anticipated traffic volume on any road will not exceed 100 vehicle trips per day.

Signed _____

Date _____

Seal and Expiration
Date

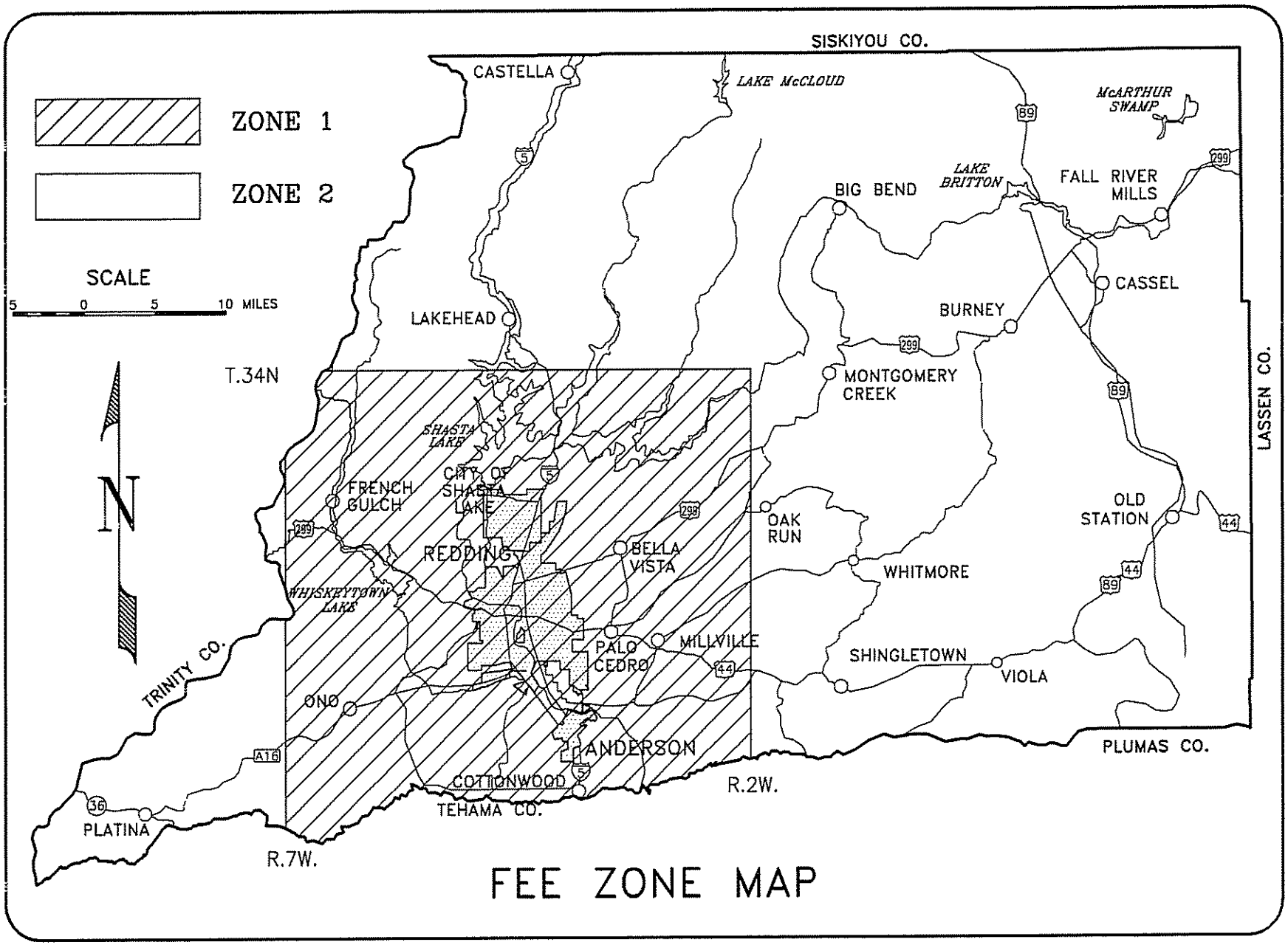
ZONE 1
ZONE 2
SCALE
5 0 5 10 MILES
N
T.34N
R.7W.
R.2W.
SISKIYOU CO.
LASSEN CO.
PLUMAS CO.
TRINITY CO.
TEHAMA CO.
CASTELLA
LAKE McCLOUD
McARTHUR SWAMP
LAKE BRITTON
BIG BEND
FALL RIVER MILLS
CASSEL
BURNEY
LAKEHEAD
MONTGOMERY CREEK
SHASTA LAKE
CITY OF SHASTA LAKE
FRENCH GULCH
REDDING
BELLA VISTA
OAK RUN
OLD STATION
WHITMORE
WHISKEYTOWN LAKE
PALO CEDRO
MILLVILLE
SHINGLETOWN
VIOLA
ONO
ANDERSON
COTTONWOOD
PLATINA
5
89
299
44
36
A16

FEE ZONE MAP

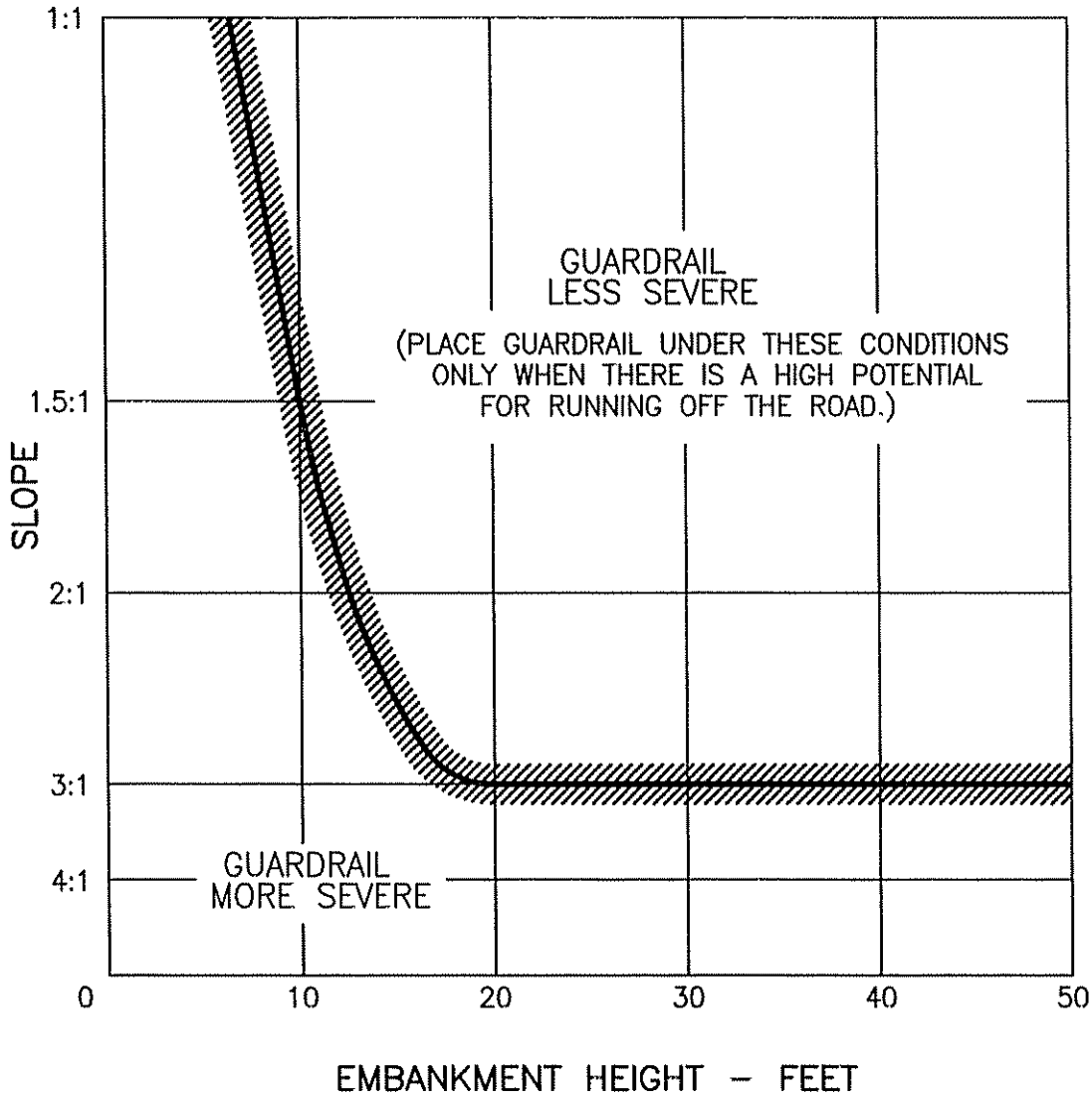

SCALE: NTS	DATE: 1996	SHASTA COUNTY DEPARTMENT OF PUBLIC WORKS	
		APPROVED BY: William E. Lyman	***EMBANKMENT GUARDRAIL PLACEMENT***
MARK / DATE / REVISION		WILLIAM E. LYMAN	EQUAL SEVERITY CURVE

COUNTY OF SHASTA
STATE OF CALIFORNIA
AGREEMENT - PARCEL MAP WITH PLANS

THIS AGREEMENT, made and entered into this ____ day of _____ , 19____, by and between the County of Shasta, a political subdivision and one of the counties of the State of California (hereinafter referred to as COUNTY), and _____ (hereinafter referred to as the DEVELOPER)

WITNESSETH:

WHEREAS, the DEVELOPER is creating a development in the County of Shasta, State of California, known as Parcel Map __-__, and

WHEREAS, the COUNTY has approved the parcel map on said development subject to certain conditions.

NOW, THEREFORE, in order to meet said conditions and to qualify said parcel map for recordation, DEVELOPER agrees and covenants with COUNTY as follows:

FIRST: That the DEVELOPER shall perform the following work to the sole satisfaction of the COUNTY and in accordance with the conditions of approval and the specifications of the County of Shasta, and subject to the approval of the COUNTY Director of Public Works, as follows:

(a) Construct the improvements within one (1) year from the date of this agreement, in accordance with the plans approved by the Director of Public Works on _____, 19__;

(b) Perform any changes or alterations in the approved plans required by the Director of Public Works, provided that all such changes or alterations do not exceed a sum of $_____ (_____ DOLLARS) or 10 percent of the original estimated cost of the improvement, whichever is greater.

SECOND: DEVELOPER agrees to perform said work at sole cost and expense, and hereby agrees to furnish an improvement security in the sum of $_____ (_____ DOLLARS) guaranteeing that they will faithfully and properly perform the construction required by this Agreement, and hereby agrees to furnish an improvement security in the sum of $_____ (_____ DOLLARS) securing payment for labor and materials; that said improvement securities must be satisfactory to the COUNTY, and must be filed with the County on the date this agreement is executed.

IN WITNESS WHEREOF, COUNTY has caused its seal to be hereunto affixed by its Officers thereunto duly authorized, and the DEVELOPERS has set his hand the day and year first above written.

COUNTY OF SHASTA

ATTEST

By_____
_____Chairman
Board of Supervisors

Carolyn Taylor
Clerk of the Board
County of Shasta

By_____
Deputy

By_____
Developer

Approved as to form:

By Karen Keating Jahr
County Counsel

COUNTY OF SHASTA
STATE OF CALIFORNIA
AGREEMENT - SUBDIVISION IMPROVEMENT

.HIS AGREEMENT, made and entered into this _____ day of _____ , 19____, by and between the County of Shasta, a political subdivision and one of the counties of the State of California (hereinafter referred to as COUNTY), and _____ (hereinafter referred to as the DEVELOPER)

WITNESSETH:

WHEREAS, the DEVELOPER is creating a subdivision in the County of Shasta, State of California, known as _____ Subdivision, Tract No. ____, and

WHEREAS, the Board of Supervisors has approved the final map on said subdivision and accepted the dedications for public streets contained therein,

NOW, THEREFORE, in order to meet said conditions of approval and to qualify said subdivision map for final acceptance and recordation, DEVELOPER agrees and covenants with County as follows:

FIRST: That the DEVELOPER shall perform the following work to the sole satisfaction of the COUNTY and in accordance with the conditions of approval and the specifications of the County of Shasta, and subject to the approval of the County Director of Public Works, as follows:

(a) Construct the improvements within one (1) year from the date of this recordation of said map, in accordance with the plans approved by the Director of Public Works on _____, 19__ and the Shasta County Subdivision Improvement Standards.

(b) Perform any changes or alterations in the approved plans required by the Director of Public Works, provided that all such changes or alterations do not exceed a sum of $_____.00 (_____ DOLLARS) or 10 percent of the original estimated cost of the improvement.

'c) Maintain the work for a period of one (1) year following the completion and acceptance thereof, make good any defective work or labor done or defective materials furnished in the performance of the construction, and furnish a maintenance security prior to acceptance of the work.

(d) Complete all survey work and establish survey monuments.

SECOND: DEVELOPER agrees to perform said work at sole cost and expense, and hereby agrees to furnish an improvement security in the sum of $_____.00 (_____ DOLLARS) guaranteeing that they will faithfully and properly perform the construction required by this Agreement, and hereby agrees to furnish an improvement security in the sum of $_____.00 (_____ DOLLARS) securing payment for labor and materials; that said improvement securities must be satisfactory to the COUNTY, and must be filed with the County on the date this agreement is executed.

IN WITNESS WHEREOF, COUNTY has caused its seal to be hereunto affixed by its Officers thereunto duly authorized, and the DEVELOPER has set his hand the day and year first above written.

COUNTY OF SHASTA

ATTEST
Carolyn Taylor
Clerk of the Board
County of Shasta

By_____
_____Chairman
Board of Supervisors

By_____
Deputy

By_____
DEVELOPER

Approved as to form:

By Karen Keating Jahr
County Counsel

COUNTY OF SHASTA
STATE OF CALIFORNIA
AGREEMENT

THIS AGREEMENT, made and entered into this day of , by and between the County of Shasta, a political Subdivision and one of the counties of the State of California (hereinafter referred to as County), and
(hereinafter referred to as Developer),

WITNESSETH:

WHEREAS, Developer has constructed public improvements in _____ Subdivision, Tract No. _____, in accordance with the plans and specifications as approved by the County Director of Public Works, and

WHEREAS, County has approved the final map on said subdivision and accepted the public improvements within said subdivision,

NOW, THEREFORE, in order to qualify said subdivision (parcel) map for final acceptance, Developer agrees and covenants with County as follows:

FIRST: That Developer shall maintain the work for a period of one (1) year from the date of this agreement and shall make good any defective work or labor done or defective materials furnished in the performance of the construction of the public improvements.

SECOND: The Developer agrees to maintain said work at sole cost and expense and hereby agrees to furnish a security in the sum of $_____.00 (_____ DOLLARS) guaranteeing that they will maintain the public improvements as required by this agreement.

IN WITNESS WHEREOF, the County has caused its seal to be hereunto affixed by its Officers thereunto duly authorized, and the Developer has set their hands the day and year first above written.

COUNTY OF SHASTA

Approved as to form:

_____
_____Chairman
Board of Supervisors

By Karen Keating Jahr
County Counsel

DEVELOPER

ATTEST:

_____

Carolyn Taylor
Clerk of the Board
County of Shasta

By_____
Deputy

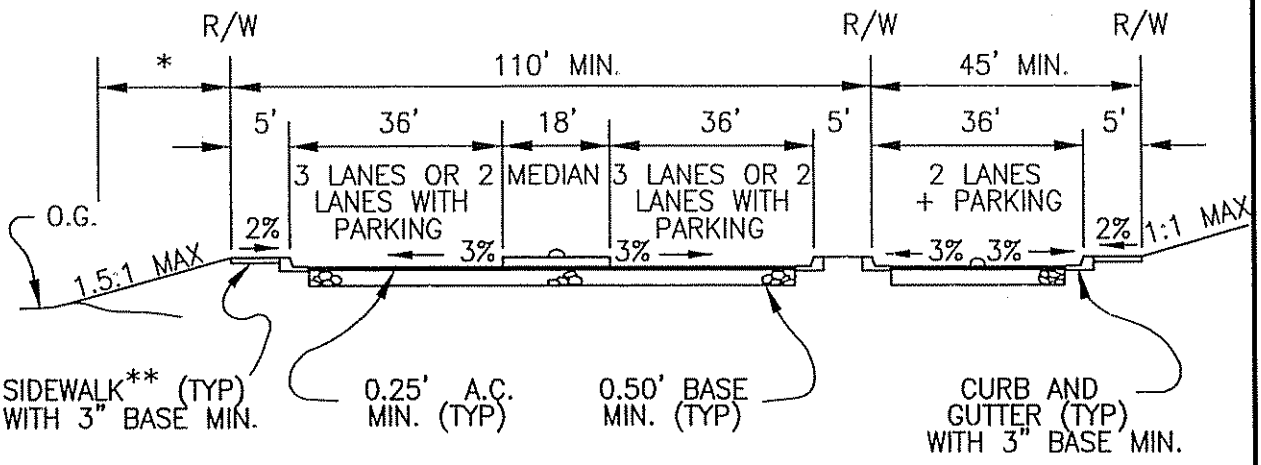

TYPICAL STREET SECTION

SEE NOTES UNDER COLLECTOR AND ARTERIAL RURAL STREET SECTIONS

NOTES:

* SLOPE AND UTILITY EASEMENT AS REQUIRED, BOTH SIDES OF R/W

** 10' SIDEWALKS MAY BE REQUIRED IN CERTAIN COMMERCIAL ZONES.

URBAN AREAS ONLY.

MIN. TRAFFIC INDEX = 9.0

SCALE: NTS		DATE: 1996	SHASTA COUNTY DEPARTMENT OF PUBLIC WORKS	
			APPROVED BY: William E. Lyman	***EXPRESSWAY*** WITH ***FRONTAGE ROAD***
MARK	DATE	REVISION	WILLIAM E. LYMAN	

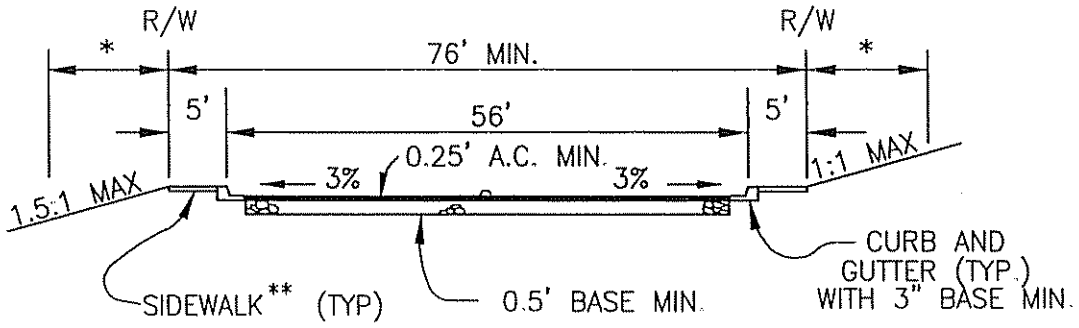

2 LANES
WITH PARKING AND MEDIAN

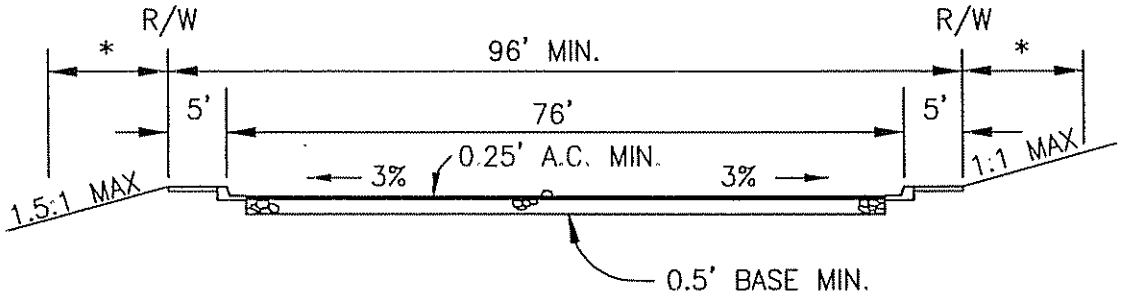

4 LANES
WITH PARKING AND MEDIAN

TYPICAL STREET SECTIONS

SEE NOTES UNDER COLLECTOR AND ARTERIAL RURAL STREET SECTIONS

NOTES:

* SLOPE AND UTILITY EASEMENT AS REQUIRED
** 10' SIDEWALKS MAY BE REQUIRED IN CERTAIN COMMERCIAL ZONES.

MIN. TRAFFIC INDEX = 7.0

SCALE: NTS		DATE: 1996	SHASTA COUNTY DEPARTMENT OF PUBLIC WORKS	
			APPROVED BY: William E. Lyman	***COLLECTOR*** AND ***ARTERIAL*** URBAN
MARK	DATE	REVISION	WILLIAM E. LYMAN	

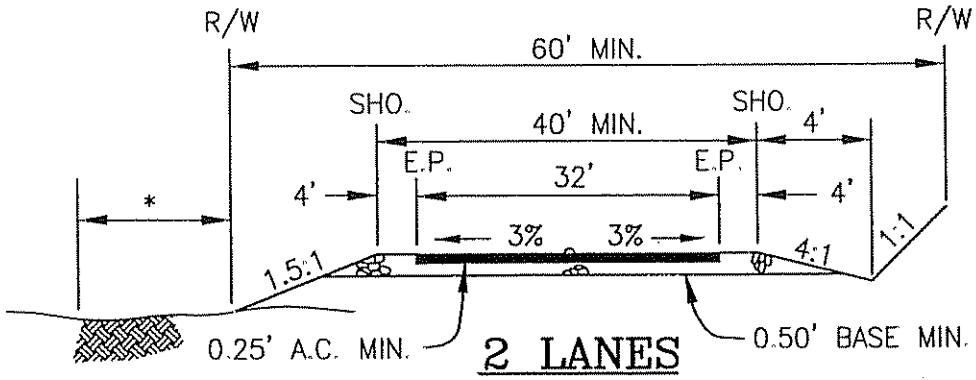

2 LANES

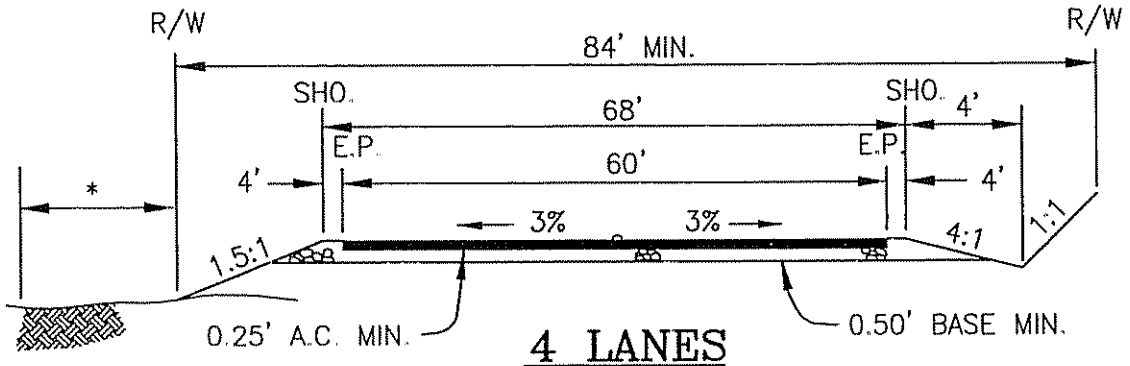

4 LANES
WITH MEDIAN

TYPICAL STREET SECTIONS

* SLOPE AND UTILITY EASEMENT AS REQUIRED. BOTH SIDES OF R/W.

NOTES

1. WIDENING MAY BE REQUIRED AT MAJOR STREET INTERSECTIONS FOR TURNING LANES.
2. URBAN STREET SECTIONS ARE REQUIRED IN GENERAL PLAN AREAS UR, SR, C, I, AND MU; AND WHERE URBAN TYPE DEVELOPMENTS ARE LOCATED IN RURAL AREAS.
3. FOR SPECIAL CIRCUMSTANCES, THE RIGHT OF WAY WIDTH CAN BE MODIFIED TO ACCOMODATE THE REQUIRED ROADWAY SECTION.
4. FINAL STRUCTURAL SECTIONS TO BE DETERMINED BY 'R' VALUE TESTING.

MIN. TRAFFIC INDEX = 7.0

SCALE: NTS		DATE: 1996	SHASTA COUNTY DEPARTMENT OF PUBLIC WORKS	
			APPROVED BY: William E. Lyman	**COLLECTOR AND ARTERIAL** RURAL
MARK	DATE	REVISION	WILLIAM E. LYMAN	

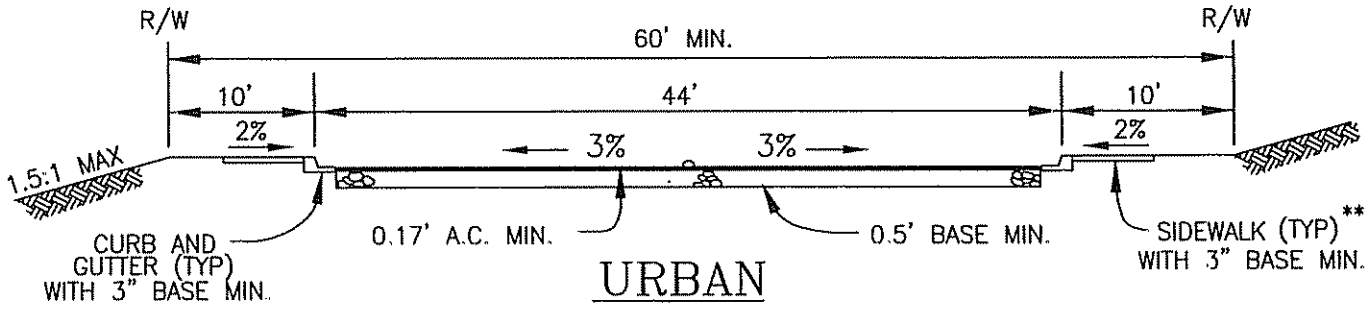

URBAN

TO BE USED IN GENERAL PLAN DESIGNATIONS UR, SR, SRI, I, AND MU.

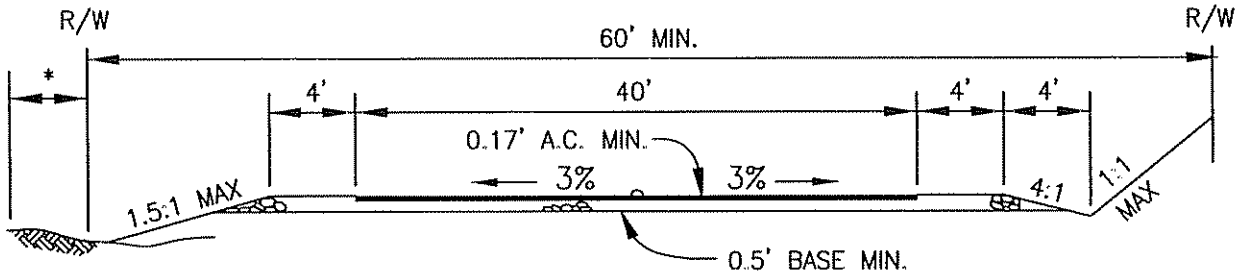

SUBURBAN

TO BE USED IN THE SRI GENERAL PLAN DESIGNATION WHEN THE AVERAGE PARCEL SIZE IS ONE ACRE AND THE AVERAGE FRONTAGE IS MORE THAN 150 FEET, OR WHERE DENSITY AVERAGING CREATES BUILDING SITES WITH AN AVERAGE FRONTAGE OF MORE THAN 150'. A 50 FOOT BUILDING SETBACK WILL BE REQUIRED IN ALL CASES WHERE THIS STANDARD APPLIES. THIS STANDARD WILL NOT BE ALLOWED IF IT CREATES A DISCONTIGUOUS PATTERN OF DEVELOPMENT.

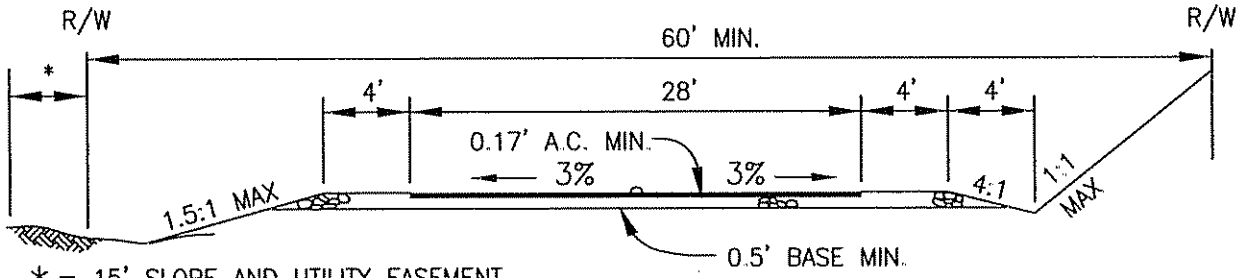

* = 15' SLOPE AND UTILITY EASEMENT AS REQUIRED – BOTH SIDES OF R/W

RURAL

TO BE USED IN ALL OTHER GENERAL PLAN DESIGNATIONS.

TYPICAL STREET SECTIONS

NOTES:
FINAL STRUCTURAL SECTION TO BE DETERMINED BY 'R' VALUE TESTING.
** 10' SIDEWALKS MAY BE REQUIRED IN CERTAIN COMMERCIAL ZONES.

MIN. TRAFFIC INDEX = 6.5

SCALE: NTS		DATE: 1996	SHASTA COUNTY DEPARTMENT OF PUBLIC WORKS	
			APPROVED BY: William E. Lyman	SUBCOLLECTOR
MARK	DATE	REVISION	WILLIAM E. LYMAN	300 OR MORE LOTS

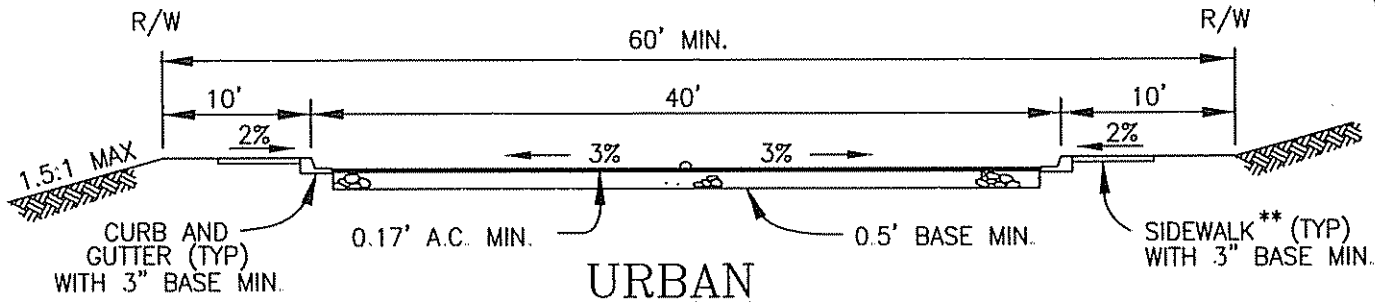

URBAN

TO BE USED IN GENERAL PLAN DESIGNATIONS UR, SR, SRI, I, AND MU.

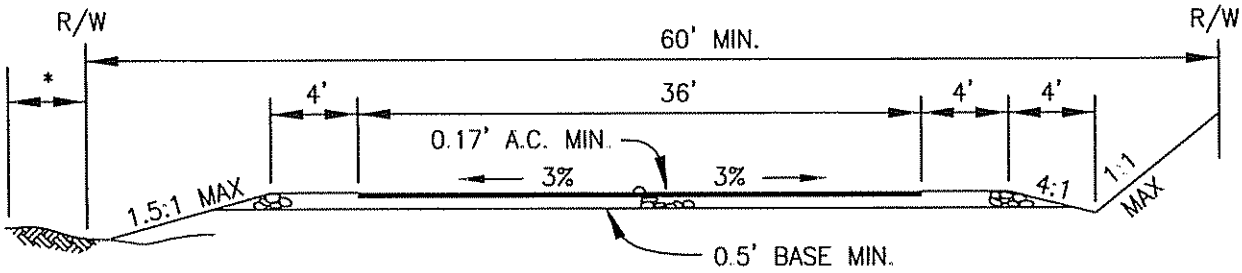

SUBURBAN

TO BE USED IN THE SRI GENERAL PLAN DESIGNATION WHEN THE AVERAGE PARCEL SIZE IS ONE ACRE AND THE AVERAGE FRONTAGE IS MORE THAN 150 FEET, OR WHERE DENSITY AVERAGING CREATES BUILDING SITES WITH AN AVERAGE FRONTAGE OF MORE THAN 150'. A 50 FOOT BUILDING SETBACK WILL BE REQUIRED IN ALL CASES WHERE THIS STANDARD APPLIES. THIS STANDARD WILL NOT BE ALLOWED IF IT CREATES A DISCONTIGUOUS PATTERN OF DEVELOPMENT.

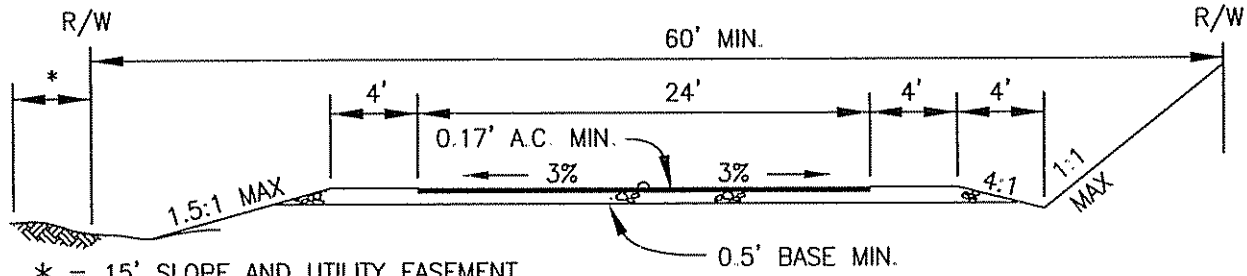

* = 15' SLOPE AND UTILITY EASEMENT AS REQUIRED – BOTH SIDES OF R/W

RURAL

TO BE USED IN ALL OTHER GENERAL PLAN DESIGNATIONS.

TYPICAL STREET SECTIONS

NOTES:
FINAL STRUCTURAL SECTION TO BE DETERMINED BY 'R' VALUE TESTING.
** 10' SIDEWALKS MAY BE REQUIRED IN CERTAIN COMMERCIAL ZONES.

MIN. TRAFFIC INDEX = 6.0

SCALE: NTS	DATE: 1996	SHASTA COUNTY DEPARTMENT OF PUBLIC WORKS
MARK / DATE / REVISION	APPROVED BY: William E. Lyman, WILLIAM E. LYMAN	*MAJOR LOCAL* 50 TO 300 LOTS

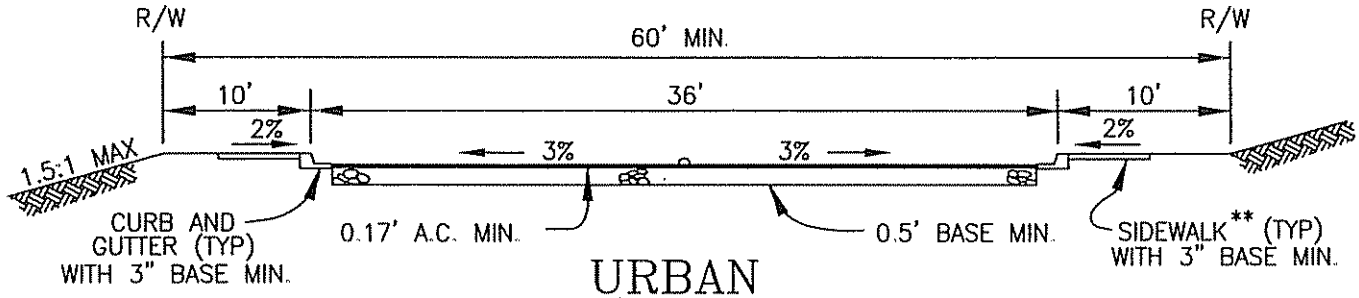

URBAN

TO BE USED IN GENERAL PLAN DESIGNATIONS UR, SR, SRI, I, AND MU.

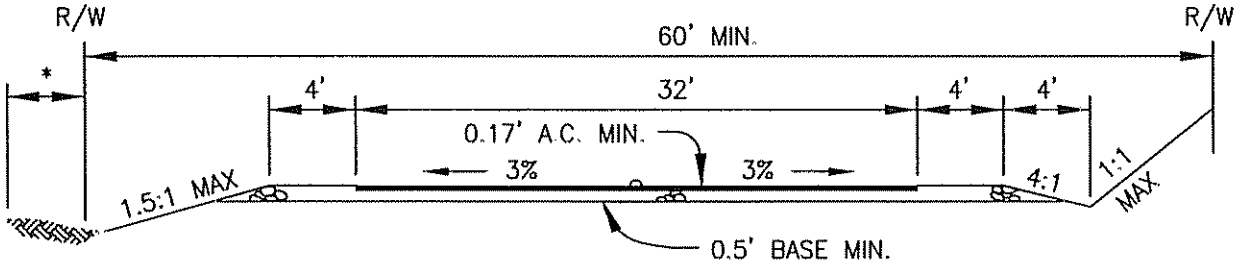

SUBURBAN

TO BE USED IN THE SRI GENERAL PLAN DESIGNATION WHEN THE AVERAGE PARCEL SIZE IS ONE ACRE AND THE AVERAGE FRONTAGE IS MORE THAN 150 FEET, OR WHERE DENSITY AVERAGING CREATES BUILDING SITES WITH AN AVERAGE FRONTAGE OF MORE THAN 150'. A 50 FOOT BUILDING SETBACK WILL BE REQUIRED IN ALL CASES WHERE THIS STANDARD APPLIES. THIS STANDARD WILL NOT BE ALLOWED IF IT CREATES A DISCONTIGUOUS PATTERN OF DEVELOPMENT.

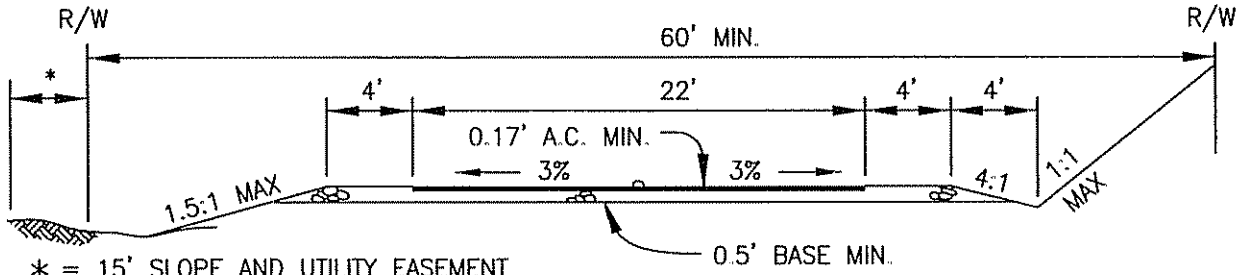

∗ = 15' SLOPE AND UTILITY EASEMENT AS REQUIRED – BOTH SIDES OF R/W

RURAL

TO BE USED IN ALL OTHER GENERAL PLAN DESIGNATIONS.

TYPICAL STREET SECTIONS

NOTES
FINAL STRUCTURAL SECTION TO BE DETERMINED BY 'R' VALUE TESTING.
**10' SIDEWALKS MAY BE REQUIRED IN CERTAIN COMMERCIAL ZONES.

MIN. TRAFFIC INDEX = 5.5

SCALE: NTS		DATE: 1996	SHASTA COUNTY DEPARTMENT OF PUBLIC WORKS	
			APPROVED BY: William E. Lyman	LOCAL
MARK	DATE	REVISION	WILLIAM E. LYMAN	25 TO 49 LOTS

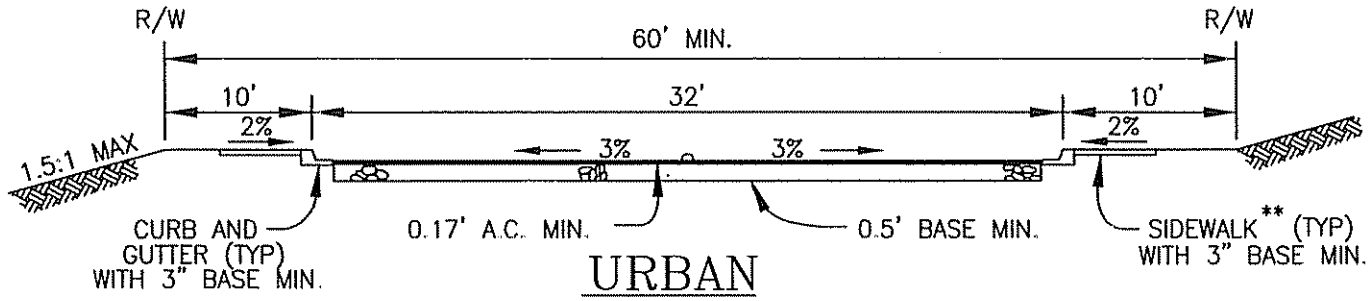

URBAN

TO BE USED IN GENERAL PLAN DESIGNATIONS UR, SR, SRI, I, AND MU.

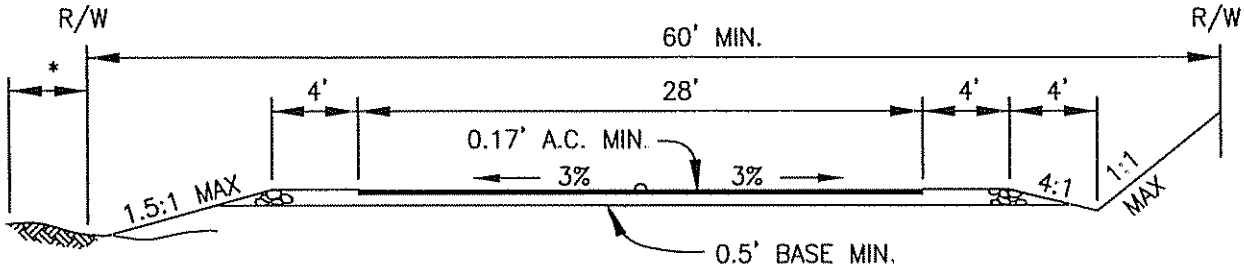

SUBURBAN

TO BE USED IN THE SRI GENERAL PLAN DESIGNATION WHEN THE AVERAGE PARCEL SIZE IS ONE ACRE AND THE AVERAGE FRONTAGE IS MORE THAN 150 FEET, OR WHERE DENSITY AVERAGING CREATES BUILDING SITES WITH AN AVERAGE FRONTAGE OF MORE THAN 150'. A 50 FOOT BUILDING SETBACK WILL BE REQUIRED IN ALL CASES WHERE THIS STANDARD APPLIES. THIS STANDARD WILL NOT BE ALLOWED IF IT CREATES A DISCONTIGUOUS PATTERN OF DEVELOPMENT.

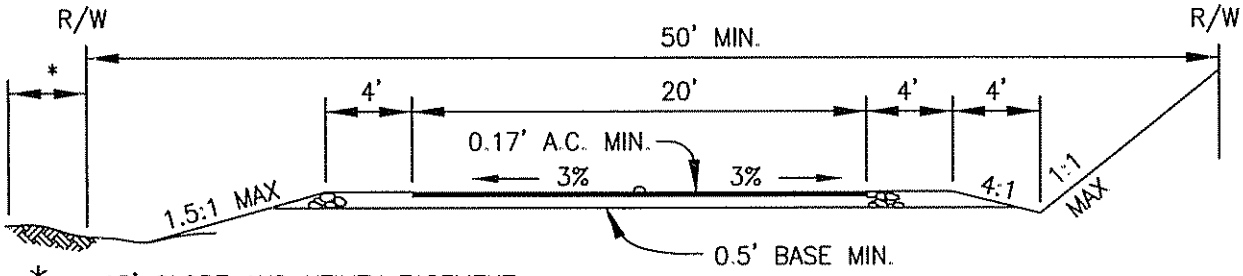

* = 15' SLOPE AND UTILITY EASEMENT AS REQUIRED – BOTH SIDES OF R/W

RURAL

TO BE USED IN ALL OTHER GENERAL PLAN DESIGNATIONS.

TYPICAL STREET SECTIONS

NOTES:
FINAL STRUCTURAL SECTIONS TO BE DETERMINED BY 'R' VALUE TESTING.
**10' SIDEWALKS MAY BE REQUIRED IN CERTAIN COMMERCIAL ZONES.

MIN. TRAFFIC INDEX = 5.0

SCALE: NTS	DATE: 1996	SHASTA COUNTY DEPARTMENT OF PUBLIC WORKS
MARK / DATE / REVISION	APPROVED BY: William E. Lyman WILLIAM E. LYMAN	*MINOR LOCAL* 10 TO 24 LOTS (RURAL) 3 TO 24 LOTS (URBAN)

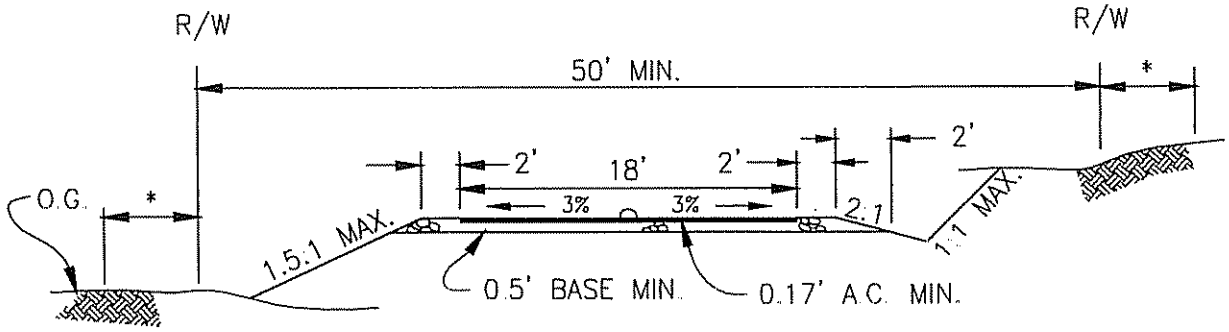

MINOR

* 15' UTILITY EASEMENT AND SLOPE EASEMENT

MIN. TRAFFIC INDEX = 4.5

NOTE: FINAL STRUCTURAL SECTION TO BE DETERMINED BY 'R' VALUE TESTING.

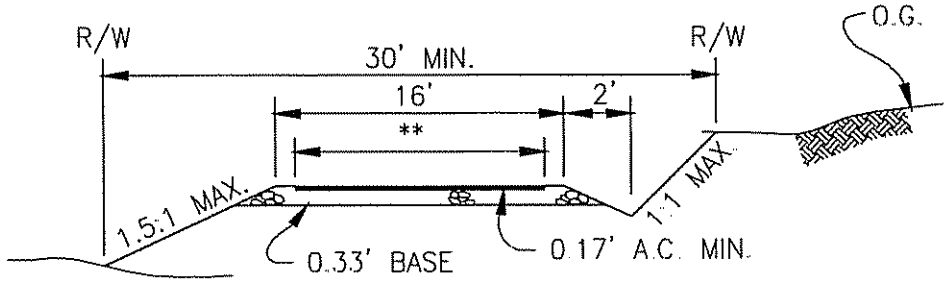

FLAG LOT DRIVEWAY

** 10' WIDE SERVING ONE LOT.
14' WIDE SERVING TWO LOTS.
RECIPROCAL EASEMENT AND ROAD MAINTENANCE AGREEMENT REQUIRED FOR TWO LOTS.

TYPICAL SECTIONS

SCALE: NTS	DATE: 1996	SHASTA COUNTY DEPARTMENT OF PUBLIC WORKS	
MARK / DATE / REVISION		APPROVED BY: William E. Lyman WILLIAM E. LYMAN	***MINOR*** 3 TO 9 LOTS AND ***FLAG LOT D/W*** 1 TO 2 LOTS

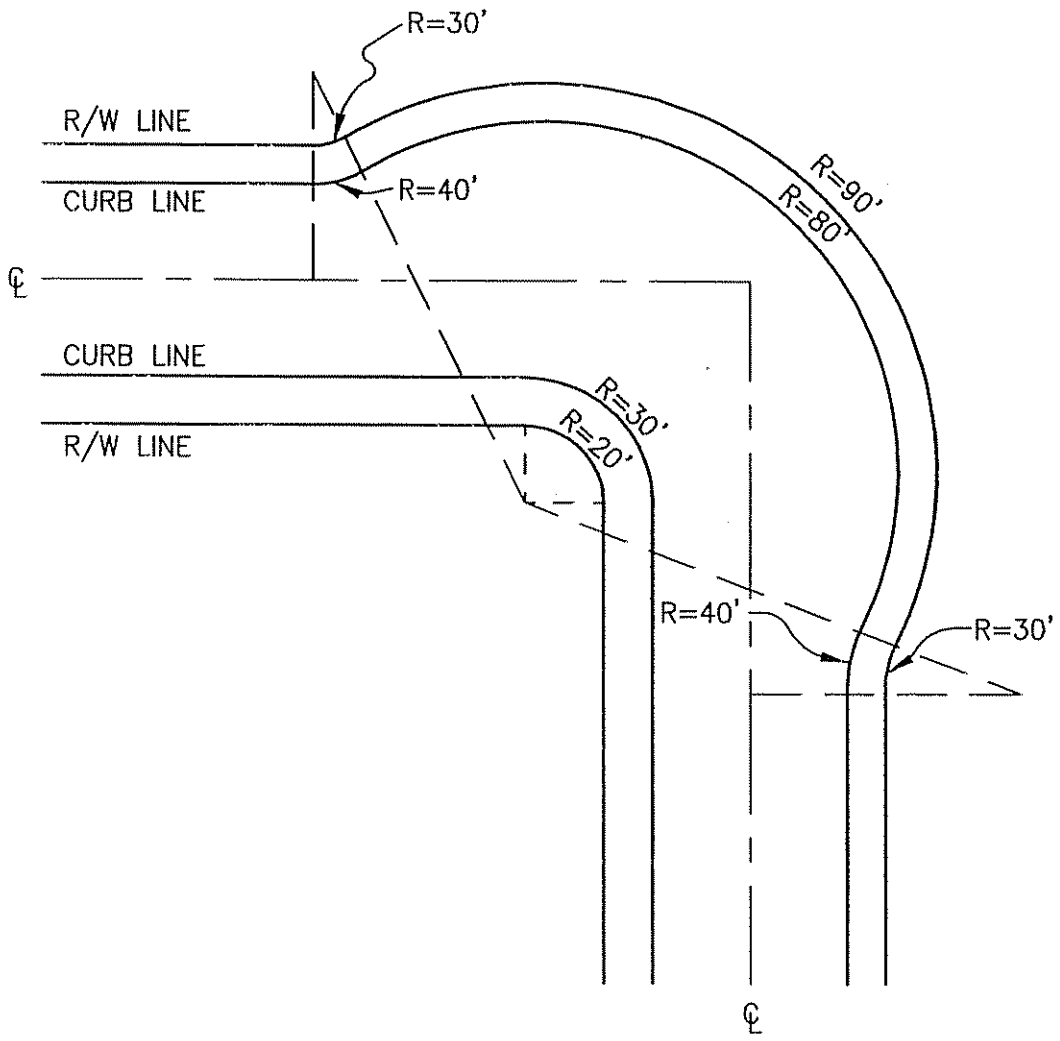

NOTE:
THIS CONFIGURATION MAY BE USED IN HIGH DENSITY RESIDENTIAL AREAS WHERE THE TRAFFIC VOLUMES ARE BELOW 150 ADT AND THE PRIMA FACIA SPEED LIMIT IS 25 MPH.

SCALE: NTS		DATE: 1996	SHASTA COUNTY DEPARTMENT OF PUBLIC WORKS	
			APPROVED BY: William E. Lyman	***URBAN ROAD INTERSECTION***
MARK	DATE	REVISION	WILLIAM E. LYMAN	'L' SHAPE

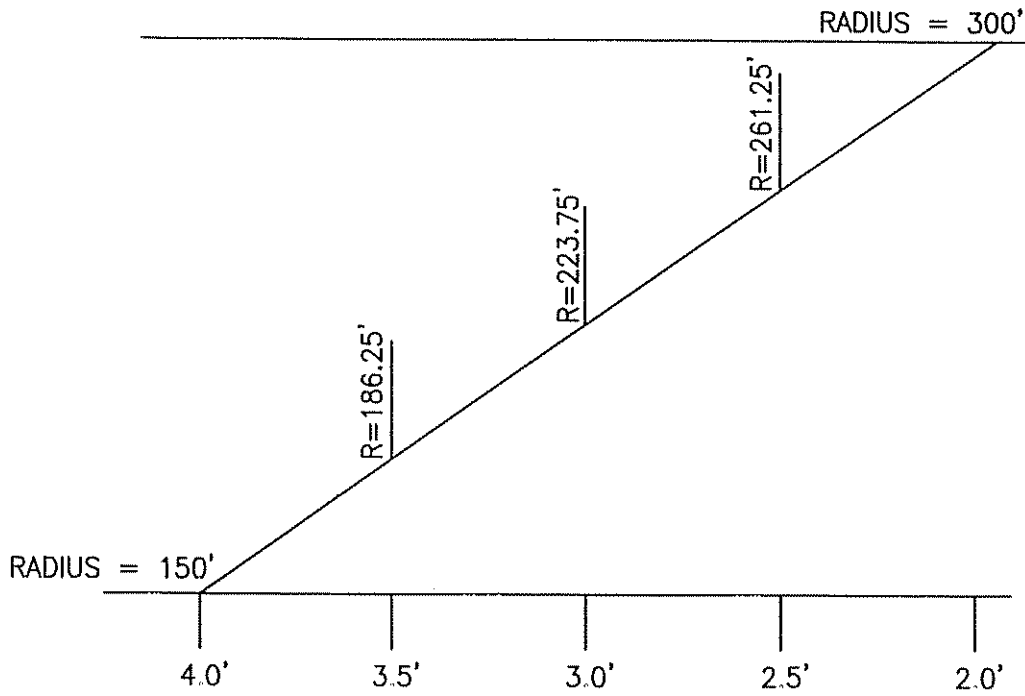

WIDENING (FT)

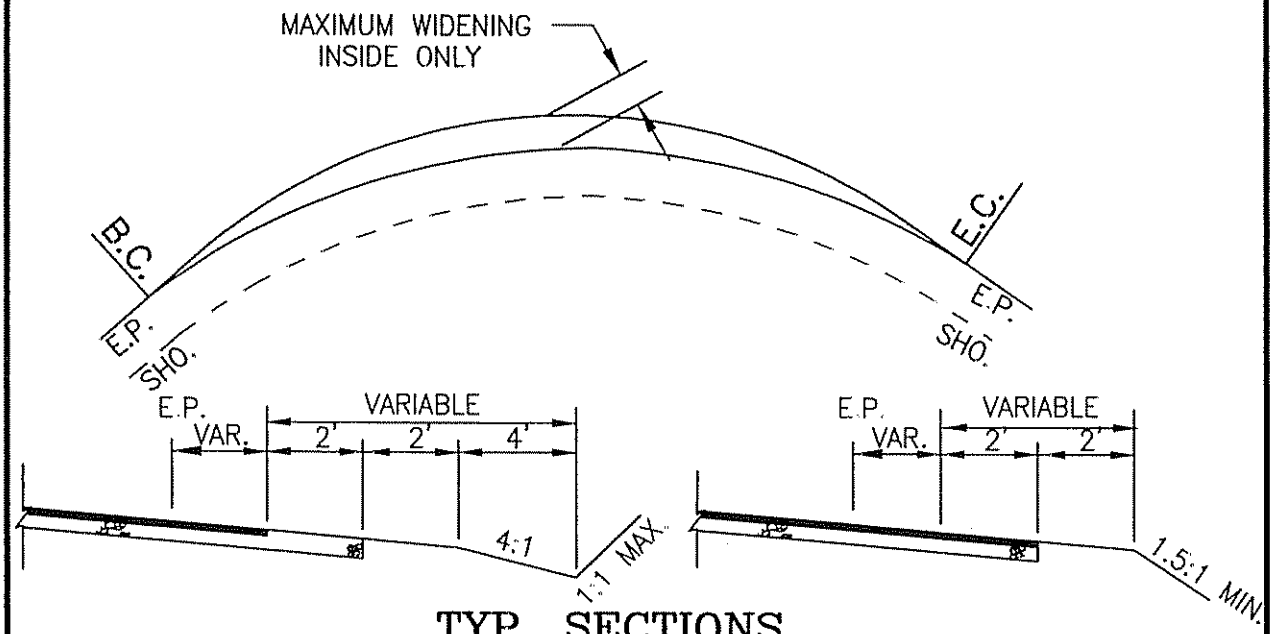

TYP. SECTIONS

SCALE: NTS	DATE: 1996	SHASTA COUNTY DEPARTMENT OF PUBLIC WORKS
		APPROVED BY: William E. Lyman WILLIAM E. LYMAN
MARK / DATE / REVISION		**SHORT RADIUS CURVE WIDENING**

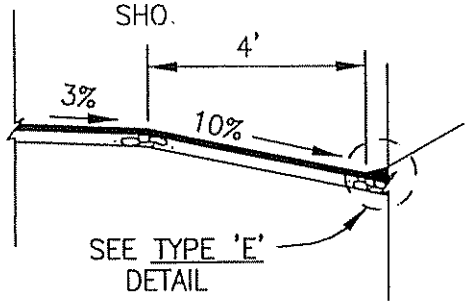

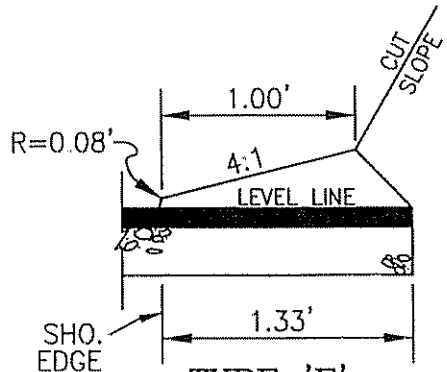

TYPE 'E'
(MOUNTABLE DIKE)

THIS SECTION SHALL NOT BE USED WHERE THE EDGE OF PAVEMENT ELEVATION IS MORE THAN 0.5' ABOVE ORIGINAL GROUND.

PAVED GUTTER

SCALE: NTS	DATE: 1996	SHASTA COUNTY DEPARTMENT OF PUBLIC WORKS
		APPROVED BY: William E. Lyman WILLIAM E. LYMAN
MARK / DATE / REVISION		**MISCELLANEOUS TYPICAL SECTIONS**

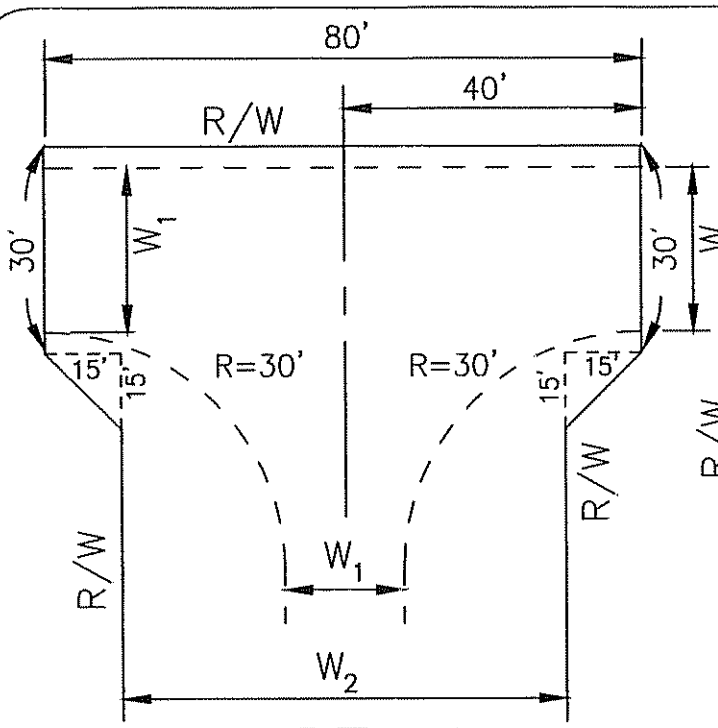

ALT. A

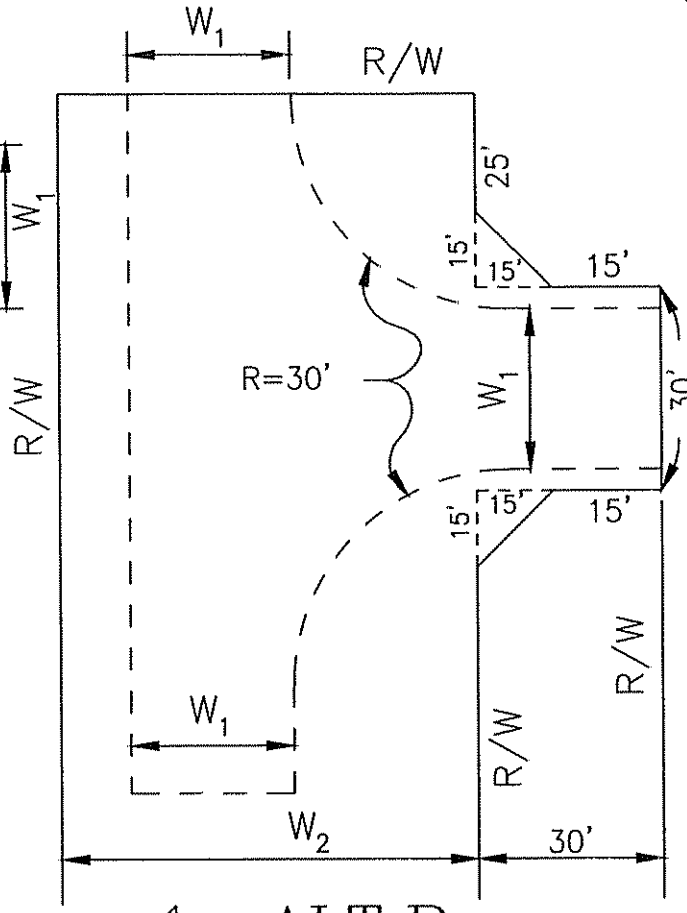

ALT.B

— — — — EDGE OF PAVEMENT

W_1 WIDTH OF PAVEMENT

W_2 WIDTH OF REQUIRED R/W

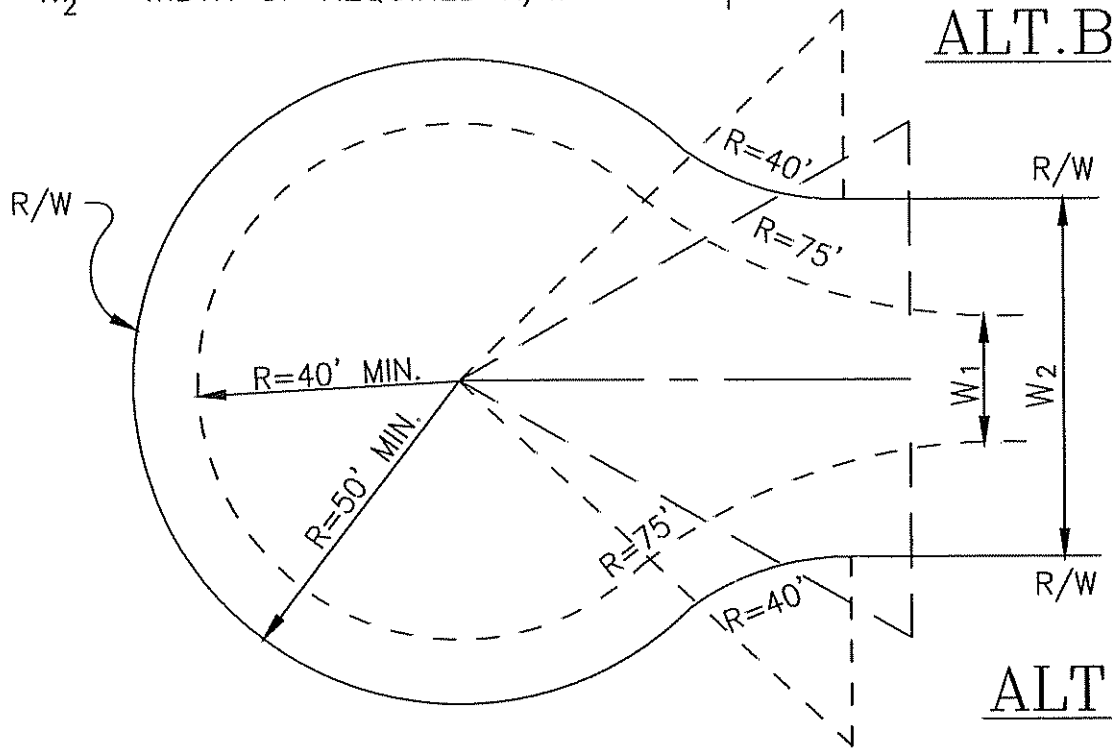

ALT. C

SCALE: NTS	DATE: 1996	SHASTA COUNTY DEPARTMENT OF PUBLIC WORKS
		APPROVED BY: William E. Lyman WILLIAM E. LYMAN
MARK / DATE / REVISION		TURNAROUND ALTERNATES FOR RURAL GENERAL PLAN DESIGNATIONS

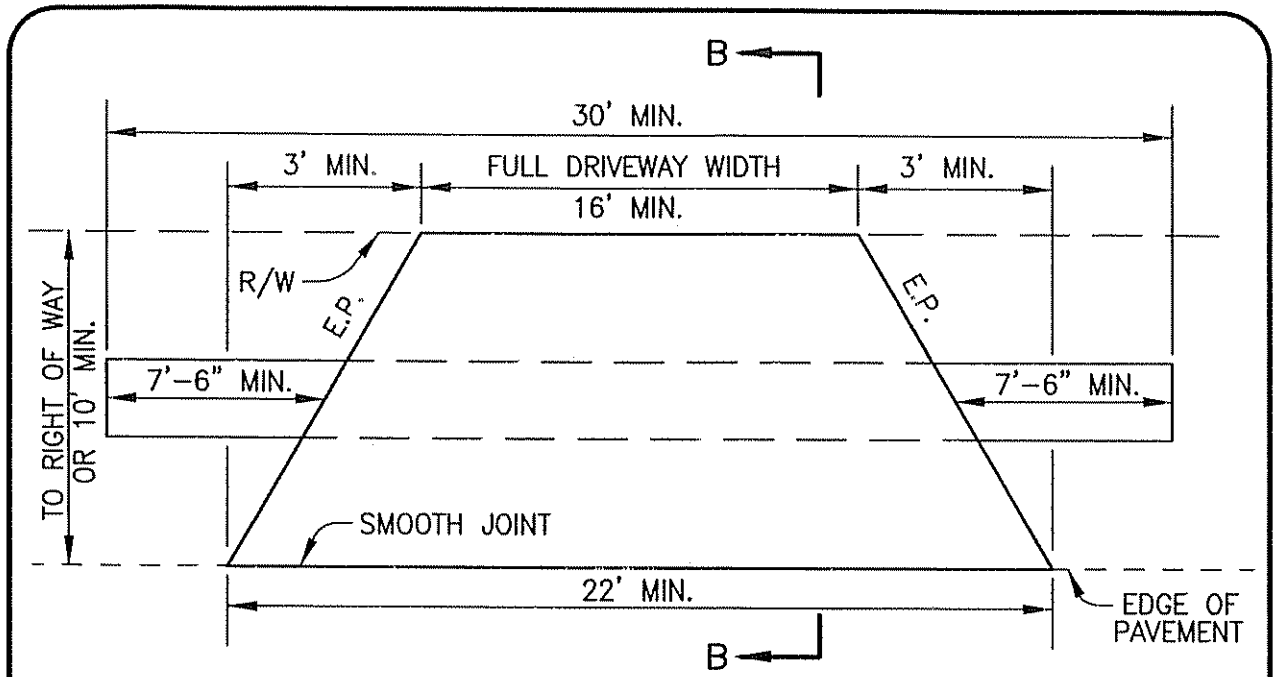

PLAN

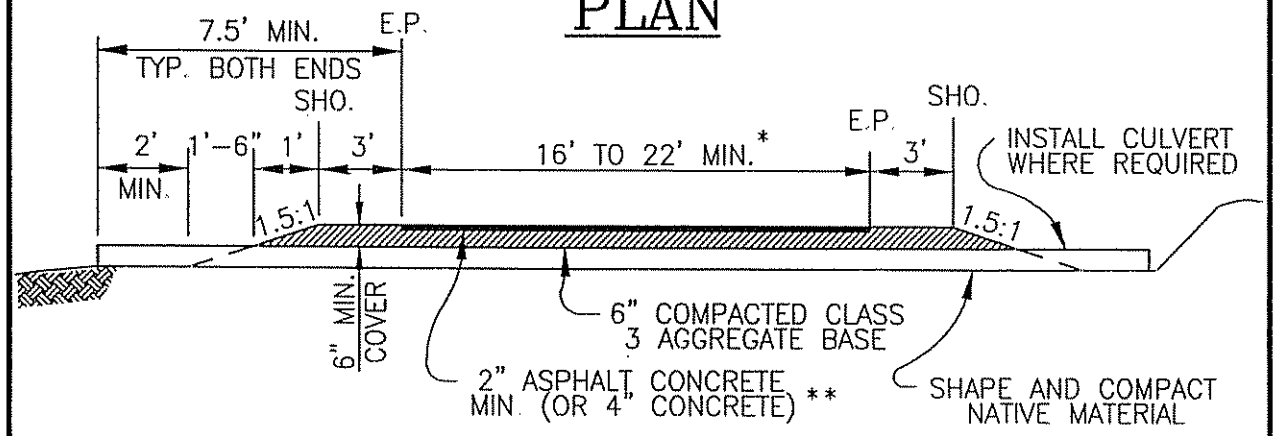

TYPICAL SECTION

* WIDER WIDTHS MAY BE REQUIRED, AS DETERMINED BY D/P/W

** CONCRETE FORMS TO BE INSPECTED BY D/P/W PRIOR TO PLACEMENT

SCALE: NTS		DATE: 1996	SHASTA COUNTY DEPARTMENT OF PUBLIC WORKS	
			APPROVED BY: William E. Lyman	**TYPE 'A' ROAD CONNECTION**
MARK	DATE	REVISION	WILLIAM E. LYMAN	

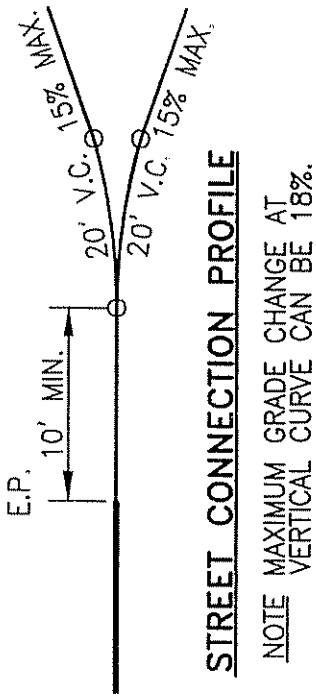

STREET CONNECTION PROFILE

NOTE MAXIMUM GRADE CHANGE AT VERTICAL CURVE CAN BE 18%.

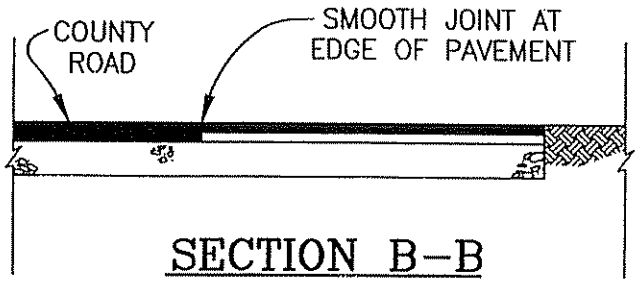

SECTION B–B

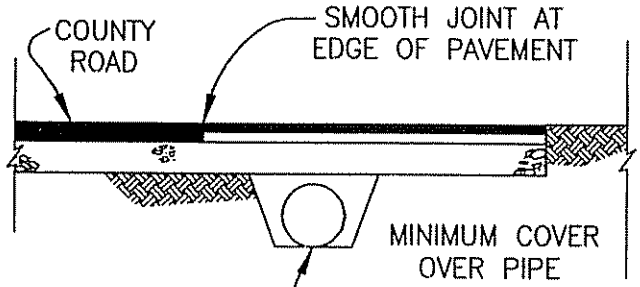

CORRUGATED METAL PIPE OR REINFORCED CONCRETE PIPE

SECTION B–B
WITH CULVERT

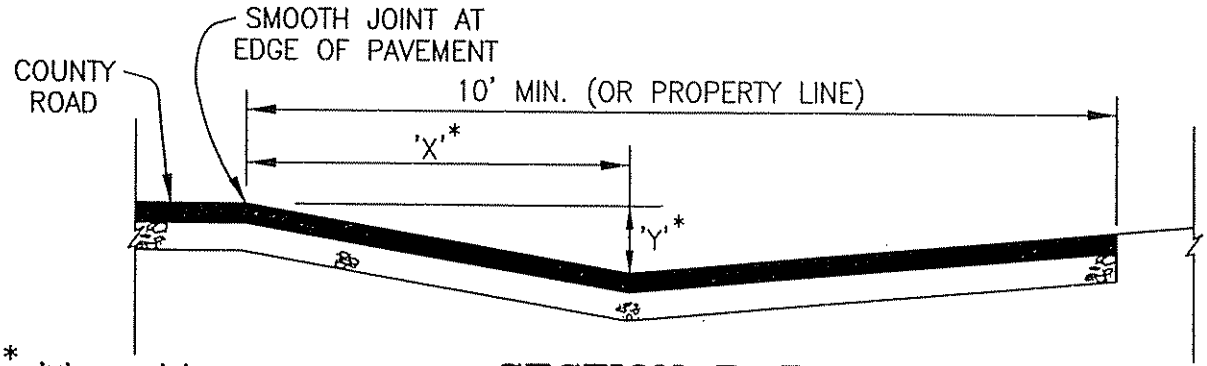

* 'X' AND 'Y' TO BE SPECIFIED BY D P W

SECTION B–B
PAVED DIP

SCALE: NTS	DATE: 1996	SHASTA COUNTY DEPARTMENT OF PUBLIC WORKS	
		APPROVED BY: William E. Lyman	TYPE 'A' ROAD CONNECTION
MARK	DATE	REVISION	WILLIAM E. LYMAN

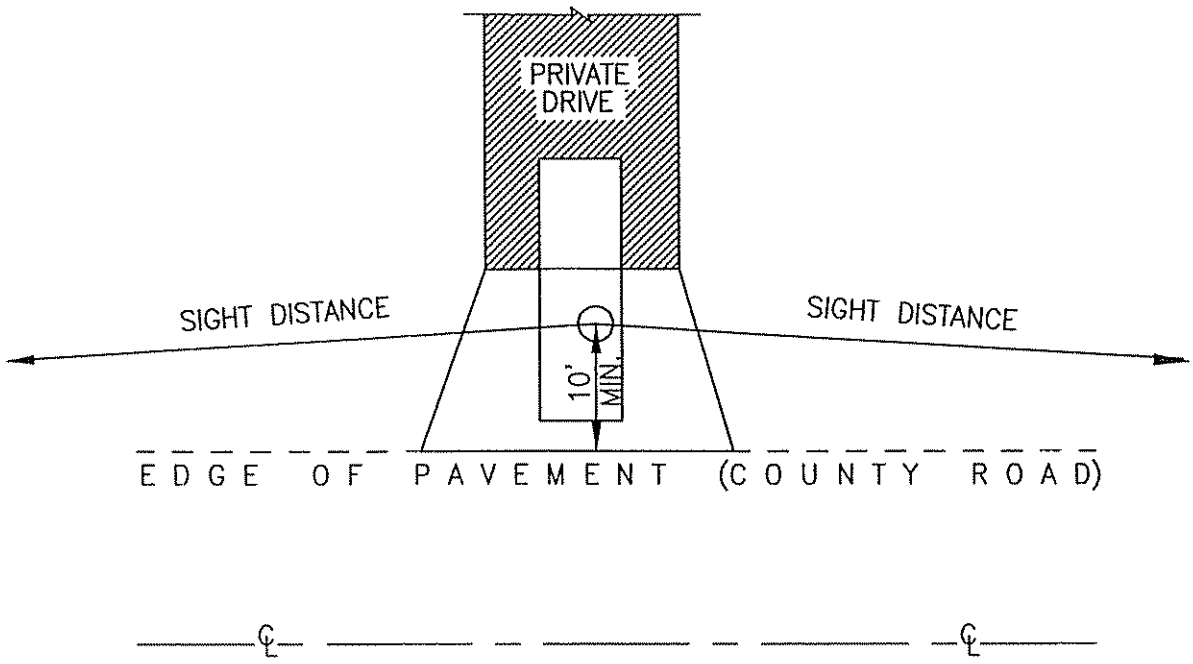

SIGHT DISTANCES *

MINIMUM	PREVAILING SPEED LIMIT
450'	55 MPH
325'	45 MPH
225'	35 MPH
150'	25 MPH

* SIGHT DISTANCE IS THE CALTRANS MINIMUM STOPPING SIGHT DISTANCE.

SCALE: NTS		DATE: 1996	SHASTA COUNTY DEPARTMENT OF PUBLIC WORKS	
			APPROVED BY: William E. Lyman	***SIGHT DISTANCES FOR DRIVEWAY CONNECTIONS***
MARK	DATE	REVISION	WILLIAM E. LYMAN	

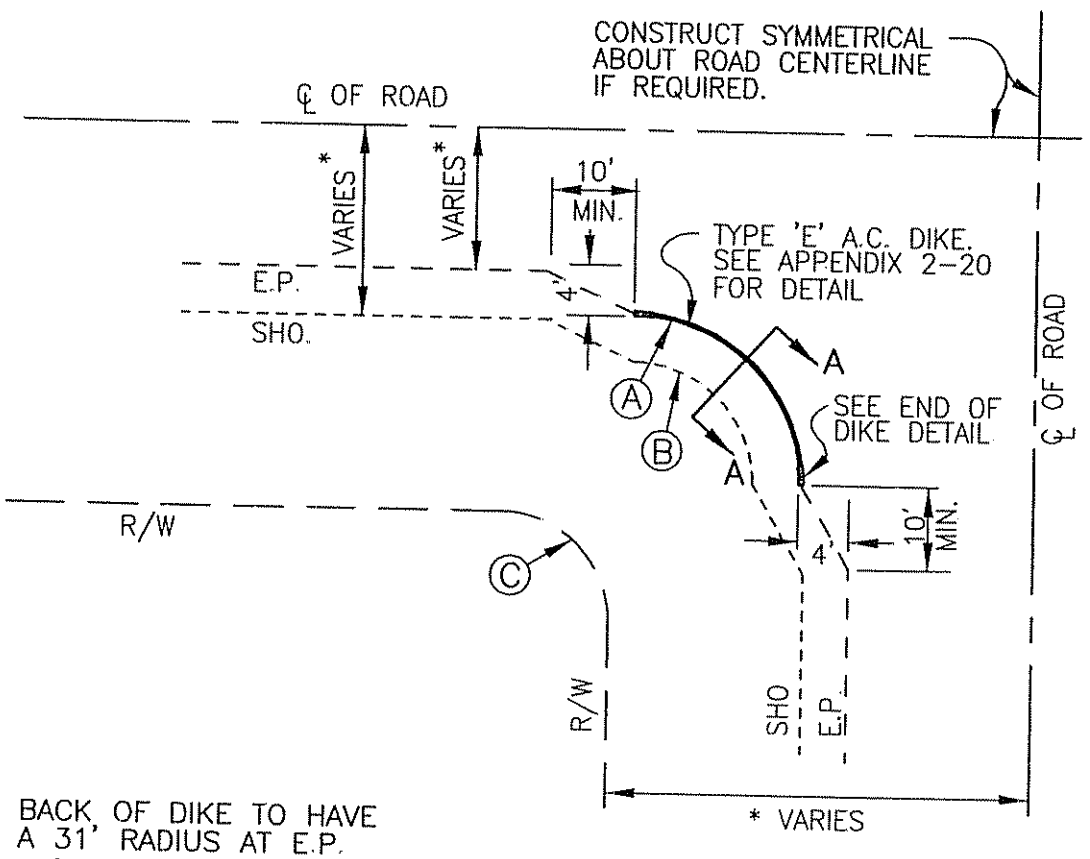

Ⓐ BACK OF DIKE TO HAVE A 31' RADIUS AT E.P.
Ⓑ 29' RADIUS AT SHOULDER
Ⓒ 20' RADIUS AT R/W
* SEE CONDITIONS REQUIRED

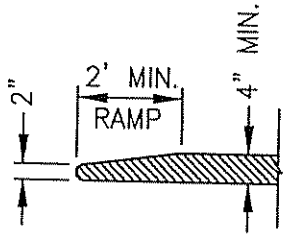

END OF DIKE

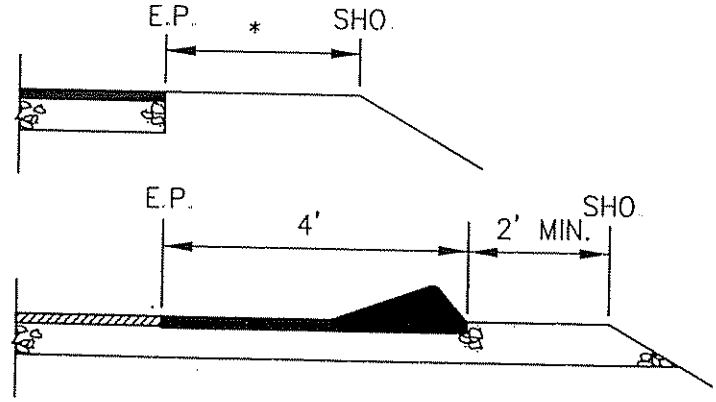

SECTION A–A

SCALE: NTS	DATE: 1996	SHASTA COUNTY DEPARTMENT OF PUBLIC WORKS	
		APPROVED BY: William E. Lyman	TYPE 'B' ROAD CONNECTION
MARK	DATE	REVISION	WILLIAM E. LYMAN

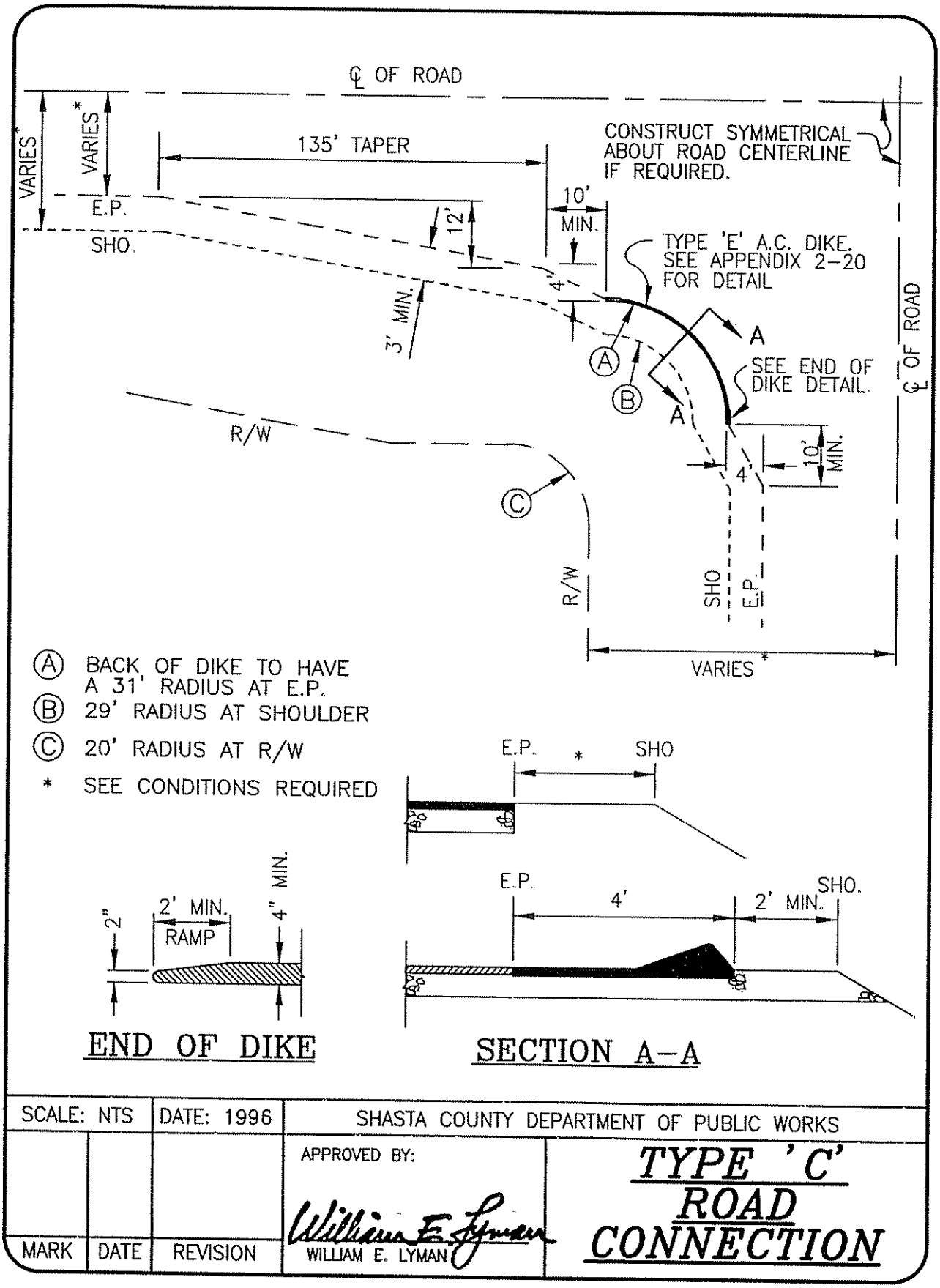

SCALE: NTS	DATE: 1996	SHASTA COUNTY DEPARTMENT OF PUBLIC WORKS	
		APPROVED BY: William E. Lyman WILLIAM E. LYMAN	TYPE 'C' ROAD CONNECTION
MARK	DATE	REVISION	

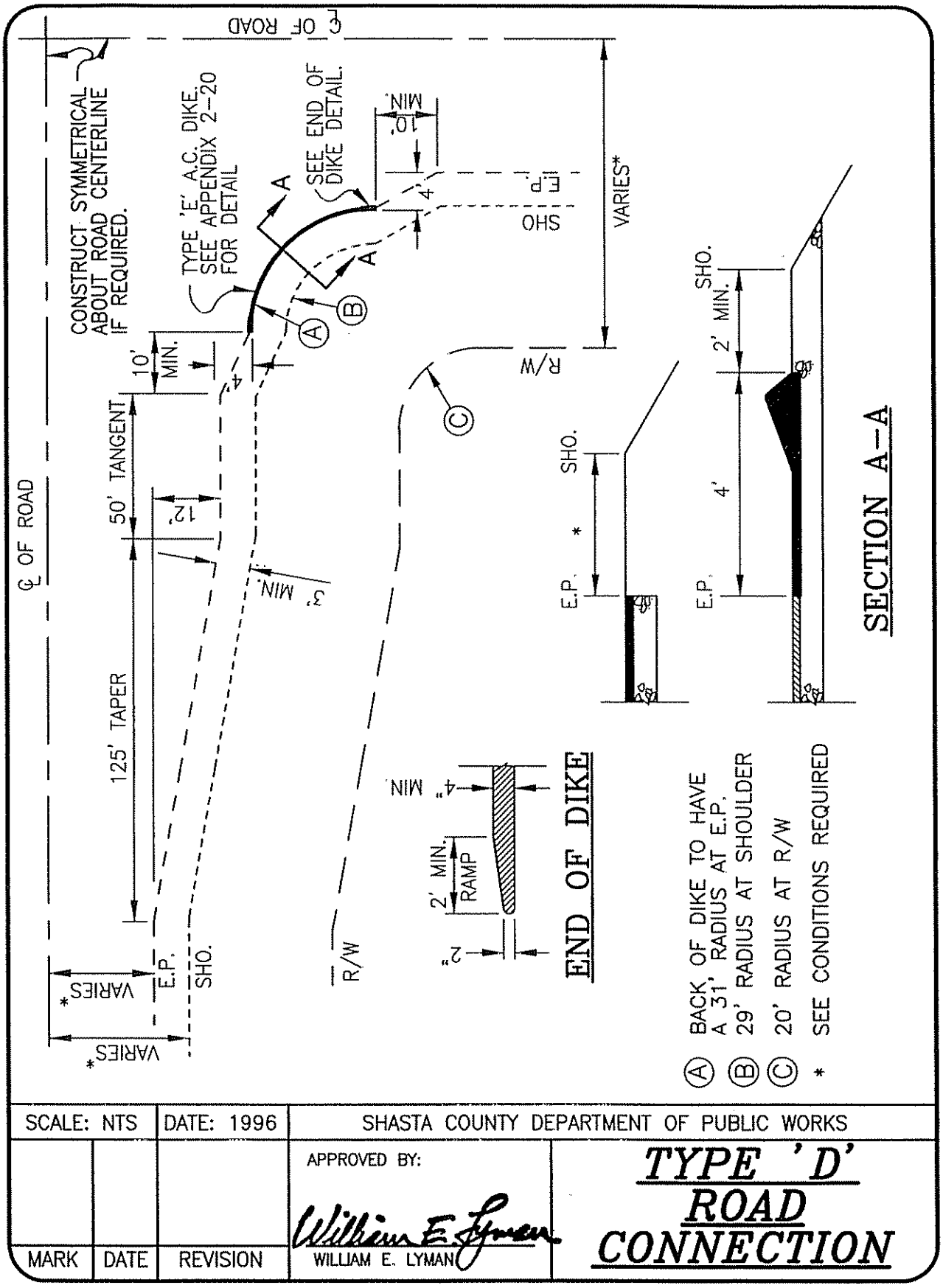

SCALE: NTS	DATE: 1996	SHASTA COUNTY DEPARTMENT OF PUBLIC WORKS	
		APPROVED BY: William E. Lyman	**TYPE 'D' ROAD CONNECTION**
MARK	DATE	REVISION	WILLIAM E. LYMAN

NOTE:
ALL CONCRETE SHALL BE 5 SACK MIX

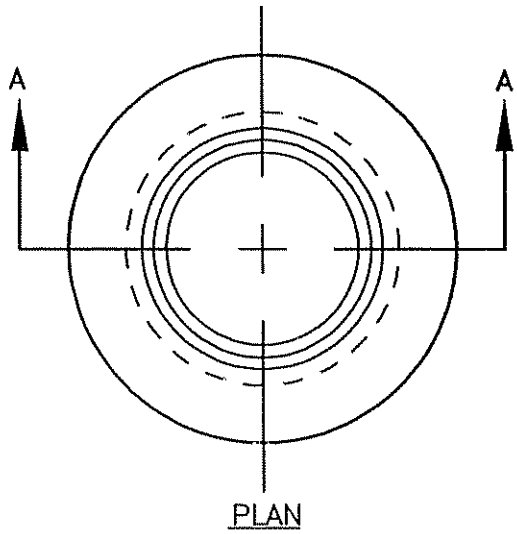

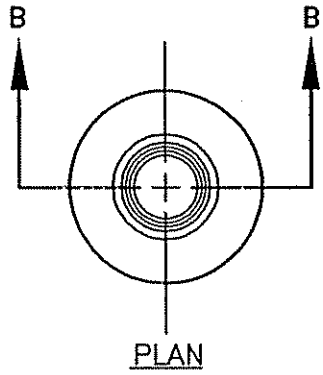

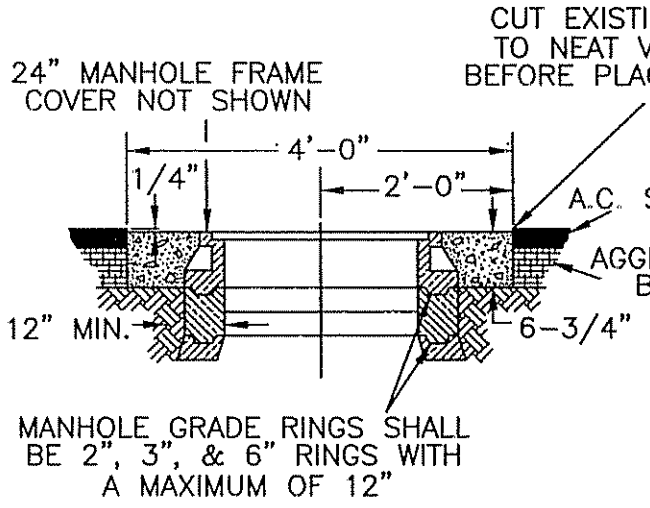

SECTION A-A

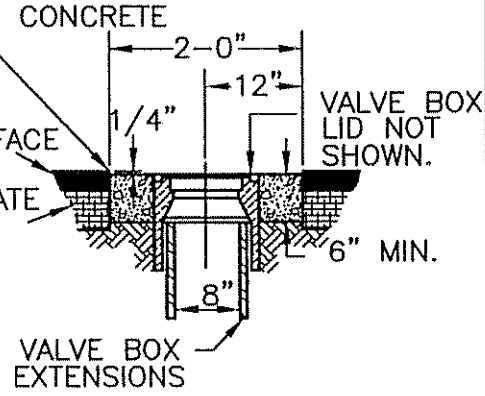

SECTION B-B

MANHOLE ADJUSTMENT VALVE COVER ADJUSTMENT

SCALE: NTS	DATE: 1996	SHASTA COUNTY DEPARTMENT OF PUBLIC WORKS	
		APPROVED BY: William E. Lyman	***MANHOLE AND VALVE COVER GRADE ADJUSTMENT***
MARK	DATE	REVISION	WILLIAM E. LYMAN

2 – 2"x12"x20' No. 2 OR BETTER DF
3 – 6"x6"x7' 'A' OR BETTER REDWOOD
2 – 18"x18" OBJECT MARKER (TYPE N-2) CALTRANS STD. PLAN A73B

DETAIL OF BUTT JOINT

NOTES

1. BARRICADES TO BE ERECTED AT EACH STREET TERMINAL IN ACCORDANCE WITH THE SPECIFICATIONS.
2. ALL LUMBER TO BE SURFACED FOUR SIDES.
3. ALL EXPOSED SURFACES TO BE PAINTED WITH TWO COATS OF WHITE EXTERIOR GRADE PAINT.
4. BARRICADE INSTALLATION SHOWN IS TO BE USED FOR STREETS HAVING CURB TO CURB WIDTHS UP TO 40 FEET. WHERE A WIDER WIDTH OF BARRICADE IS REQUIRED, IT SHALL BE MADE IN 10 FOOT MULTIPLES OF THE ABOVE UNIT.
5. STEEL PLATES TO BE INSTALLED WITH 1/2" CARRIAGE BOLTS USING CUT WASHERS AND NUTS.

SCALE: NTS	DATE: 1996	SHASTA COUNTY DEPARTMENT OF PUBLIC WORKS
		APPROVED BY: William E. Lyman WILLIAM E. LYMAN
MARK / DATE / REVISION		**STANDARD STREET TIMBER BARRICADE**

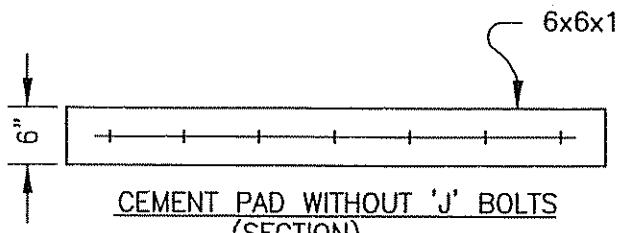

CEMENT PAD WITHOUT 'J' BOLTS
(SECTION)

STANDARD BOX PADS

1 BOX PAD = 5'x5'x6"
2 BOX PAD = 5'x6'x6"
3 BOX PAD = 5'x8.5'x6"
4 BOX PAD = 5'x11'x6"
5 BOX PAD = 5'x13.5'x6"
6 BOX PAD = 5'X16'X6"

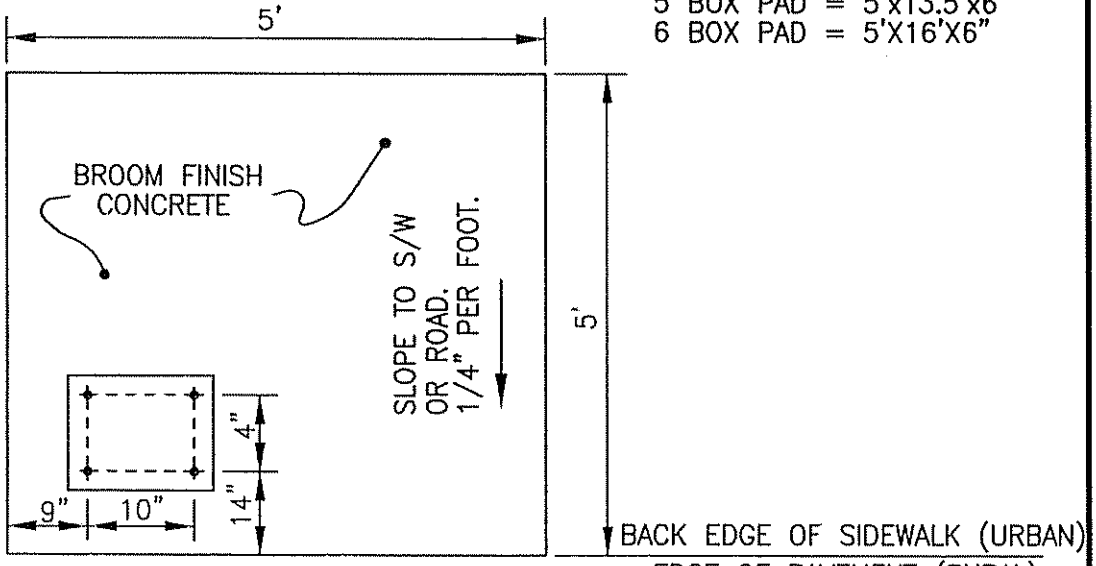

PAD SPECIFICATIONS FOR 1 BOX UNIT
(PLAN)

URBAN

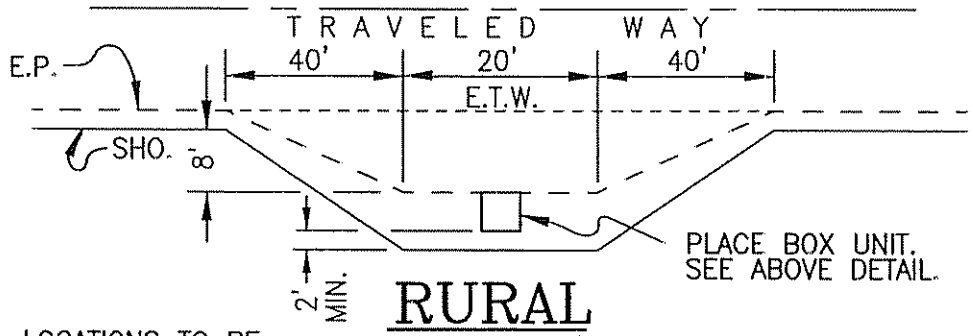

RURAL

NOTES
1. FINAL LOCATIONS TO BE DETERMINED BY POSTAL SERVICE.
2. EACH BOX UNIT SERVES UP TO 15 RESIDENCES.

SCALE: NTS	DATE: 1996	SHASTA COUNTY DEPARTMENT OF PUBLIC WORKS
	APPROVED BY: William E. Lyman WILLIAM E. LYMAN	***CLUSTER BOX PADS*** FOR CENTRALIZED MAIL DELIVERY UNITS

MARK	DATE	REVISION

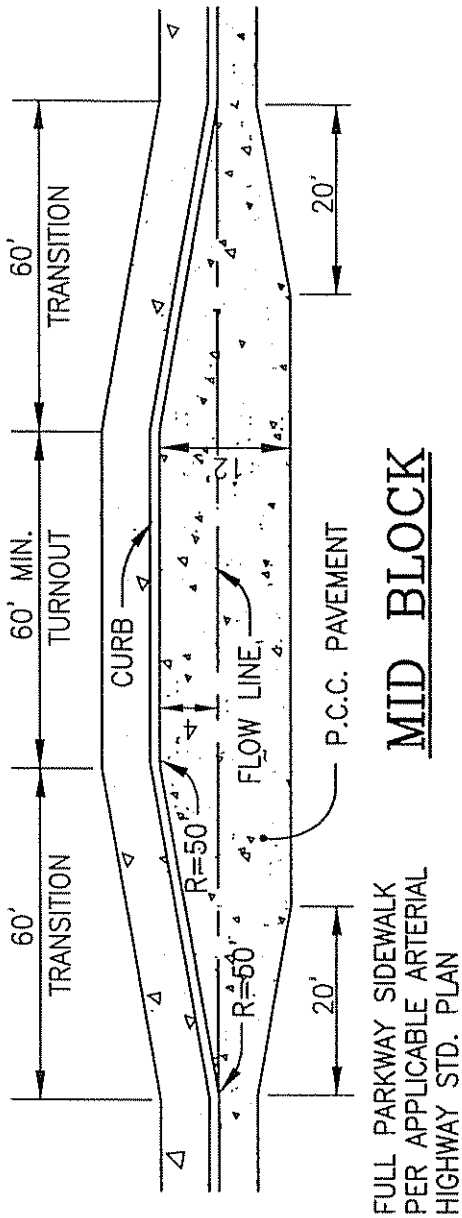

MID BLOCK

FULL PARKWAY SIDEWALK
PER APPLICABLE ARTERIAL
HIGHWAY STD. PLAN

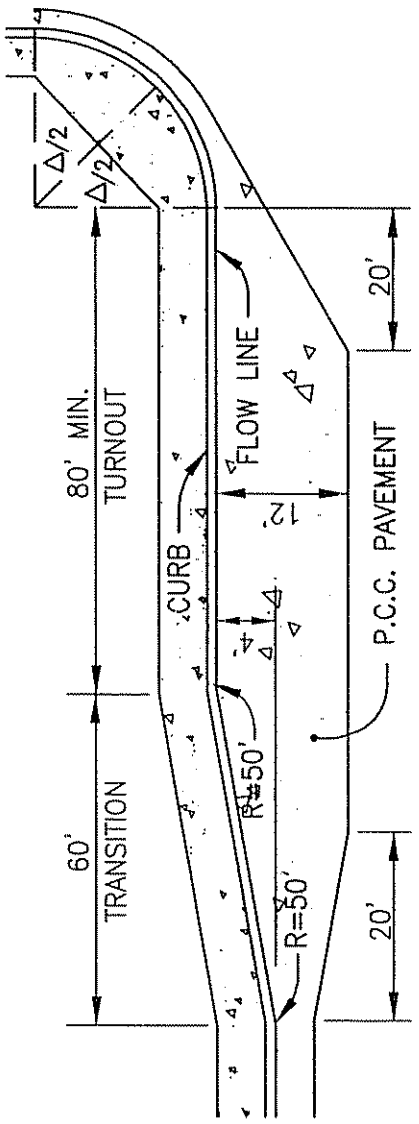

FAR SIDE

NOTES:

1. P.C.C. PAVEMENT THICKNESS SHALL BE DETERMINED BY THE ENGINEER.
2. BUS SHELTERS SHALL BE SET BACK FROM THE FACE OF THE CURB A MINIMUM CLEAR DISTANCE OF FOUR (4) FEET FOR PEDESTRIAN TRAVELWAY.
3. CURB SHALL BE POURED MONOLOTHIC WITH P.C.C. PAVEMENT.
4. MODIFICATION OF THIS STANDARD SHALL BE REVIEWED FOR ACCEPTABILITY BY THE TRAFFIC ENGINEERING DIVISION.

SCALE: NTS		DATE: 1996	SHASTA COUNTY DEPARTMENT OF PUBLIC WORKS	
			APPROVED BY: William E. Lyman	**BUS TURNOUTS**
MARK	DATE	REVISION	WILLIAM E. LYMAN	

SPECIAL PURPOSE ROADS

INTRODUCTION

For the purpose of design, highways have been classified in this book by function with specific design values for each functional class. Subsequent chapters discuss the design of collectors, arterials, and freeways. The first two sections of this chapter discuss the design of local roads and streets. Another type of highways, however, is different because of its purpose and does not fit into any of the notes classifications. This type of highway is referred to as a special purpose road, and because of its uniqueness, separate design criteria are provided. Special purpose roads include recreational roads, resource development roads, and local service roads. Roads in the special purpose category are generally lightly traveled and of low speed and for these reasons deserve special consideration relative to their appropriate design features.

REFERENCES

1. *Standard Specifications for Highway Bridges*, Washington, D.C.: AASHTO, 1973.

2. Federal Highway Administration, National Joint Committee on Uniform Traffic Control Devices. *Manual on Uniform Traffic Control Devices.* Washington, D.C." U.S. Government Printing Office, 1978.

3. Bert, K. E., et al. *Accommodation of Utility Plants Within the Rights-of-Way of Urban Streets and Highways, Manual of Improved Practices. ASCE Manual No. 14.* Chicago: American Public Works Association, and New York: American Society of Civil Engineers, July 1974, 102. Pp.

4. *Guide for Accommodating Utilities on Highway Rights-of-Way.* Washington, D.C.: AASHTO.

5. American Association of State Highway and Transportation Officials, Joint Task Force for Highway Lighting. *An Informational Guide for Roadway Lighting.* Washington, D.C.: AASHTO, 1976.

6. *Guide for Development of New Bicycle Facilities.* Washington, D.C.: AASHTO, 1981.

7. Construction Engineering Laboratory. Corps of Engineers. *Design Guidelines for Recreational Roads.* 1975.

8. *Guide for Selecting, Locating, and Designing Traffic Barriers.* Washington, D.C.: AASHTO, 1977.

9. U.S. Forest Service. *Logging Road Handbook – The Effect of Road Design on Hauling Costs. Agriculture Handbook No. 183.* 1960.

10. Glennon, John C. "Design and Traffic Control Guidelines for Low-Volume Rural Roads." *NCHRP Report 214*, 1979, 41 pp.

RECREATIONAL ROADS

General Considerations

Roads serving recreational sites and areas are unique in that they are also part of the recreational experience. Design criteria described herein meet the unusual requirements of roads for access to, through, and within recreational sites, areas, and facilities for the complete enjoyment of the recreationist. The criteria are intended to protect and enhance the existing esthetic, ecological, environmental, and cultural amenities that form the basis for distinguishing each particular recreational site or area.

First, persons visiting a recreational area need access to the general area, usually by an external highway. Second, these persons need access from this external road system to the recreational site. This access road is the most important link in the recreational site. For roads beyond this point design criteria require that the visitor be made aware of the nature of the area, and these roads should consequently become an integral part of the recreational area. The design of these roads should be approached by a multi disciplinary team of persons with varied backgrounds and experience.

The criteria discussed in this chapter are applicable for public roads within all types of recreational sites and areas. Design criteria for recreational roads are discussed for primary access roads, circulation roads, and area roads. Primary access roads are defined as roads that allow through movement into and between access areas. Circulation roads allow movement between activity sites within an access area. Area roads allow direct access to individual activity areas such as campgrounds, park areas, boat launching ramps, picnic groves, and scenic and historic sites.

Figure V-4 depicts a potential road system serving a recreational area. Road links are labeled in accordance with the classification system noted.

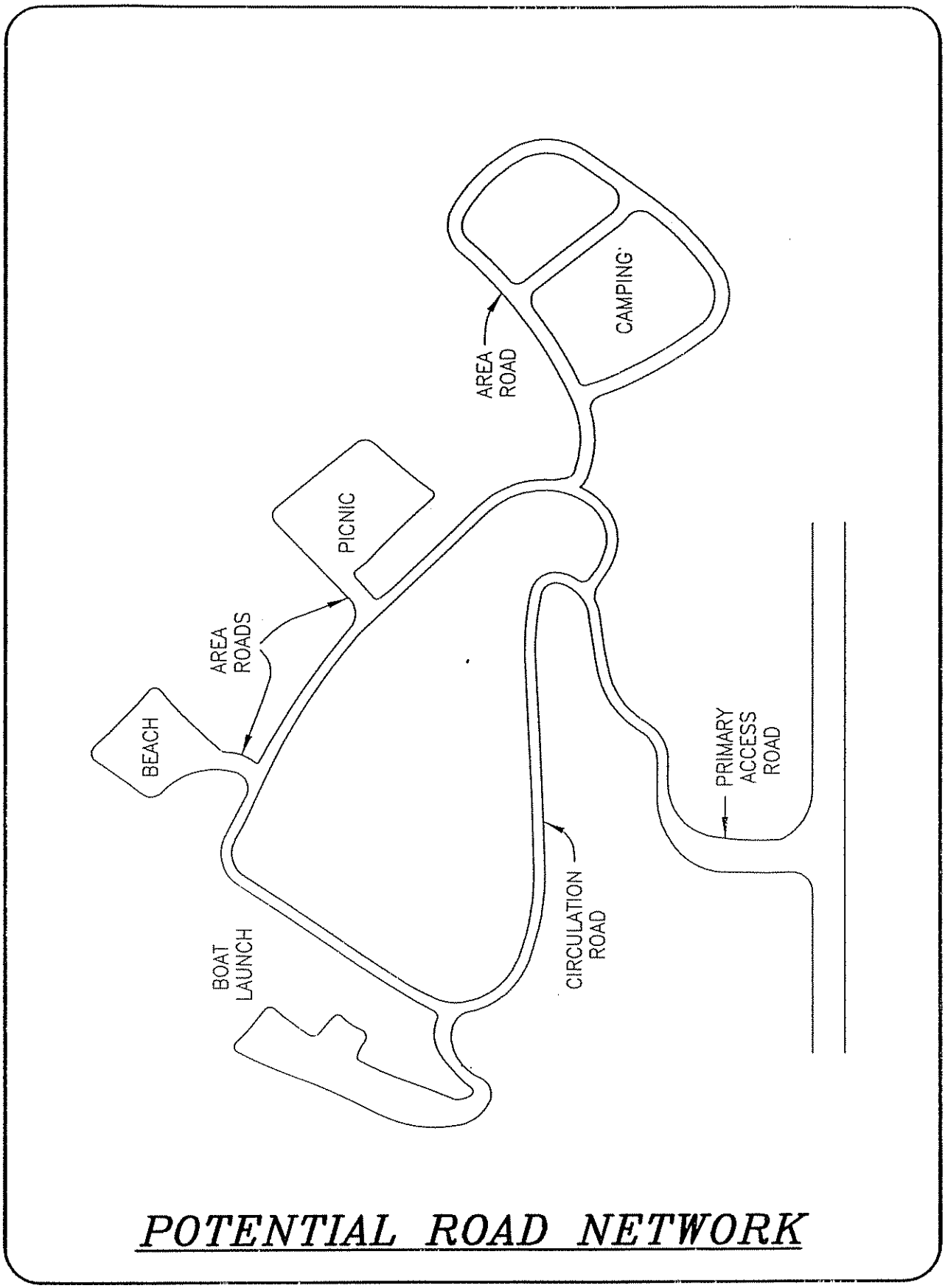

POTENTIAL ROAD NETWORK

FIGURE V-4

Design Speed

The effect of design speed on various roadway features is considered in its selection; however, the speed is selected primarily on the basis of the character of the terrain and the functional classification of the road. The design speeds should be approximately 40 mph for primary access roads, 30 mph for circulation roads, and 20 mph for area roads. There may be instances where design speeds less than these may be appropriate because of severe terrain conditions or major environmental concerns. Design speeds on one-lane roads would usually be less than 30 mph. If a design speed of greater than 40 mph is used, the first section of this chapter should be consulted.

Design speed is the principal factor that must be correlated with the physical features of design to achieve a roadway that will accommodate the traffic safely for the planned use. Once a design speed is selected, all geometric features should be related to it to obtain a balanced design. Changes in terrain and other physical controls may dictate a change in design speed in certain sections. A decrease in design speed along the road should not be introduced abruptly, but extended over a sufficient distance to allow the driver to adjust and make the transition to the slower speed.

Design Vehicle

The physical dimensions and operating characteristics of vehicles and the percentage of variously sized vehicles using recreational roads are primary geometric design controls. Existing and anticipated vehicle types must be examined to establish representative vehicles for each functional roadway class. Each design vehicle considered should represent an ample percentage of the vehicles expected to use the facility during its design life.

Three categories of vehicles are common to recreational areas — motor homes, vehicles with trailers, and standard passenger vehicles. Critical physical dimensions for geometric design are the overall length, width, and height of the units. Minimum turning paths of the design vehicles are influenced by the vehicle steering mechanism, track width, and wheelbase arrangement. Figures V-5, V-6, and V-7, taken from *Design Guidelines for Recreational Roads (7)*, show minimum turn paths for motor homes (MH), passenger cars with 30-ft travel trailers (PT), and passenger cars with 20-ft boats (PB). Turning path dimensions for other vehicle types such as buses and passenger cars are covered in Chapter II.

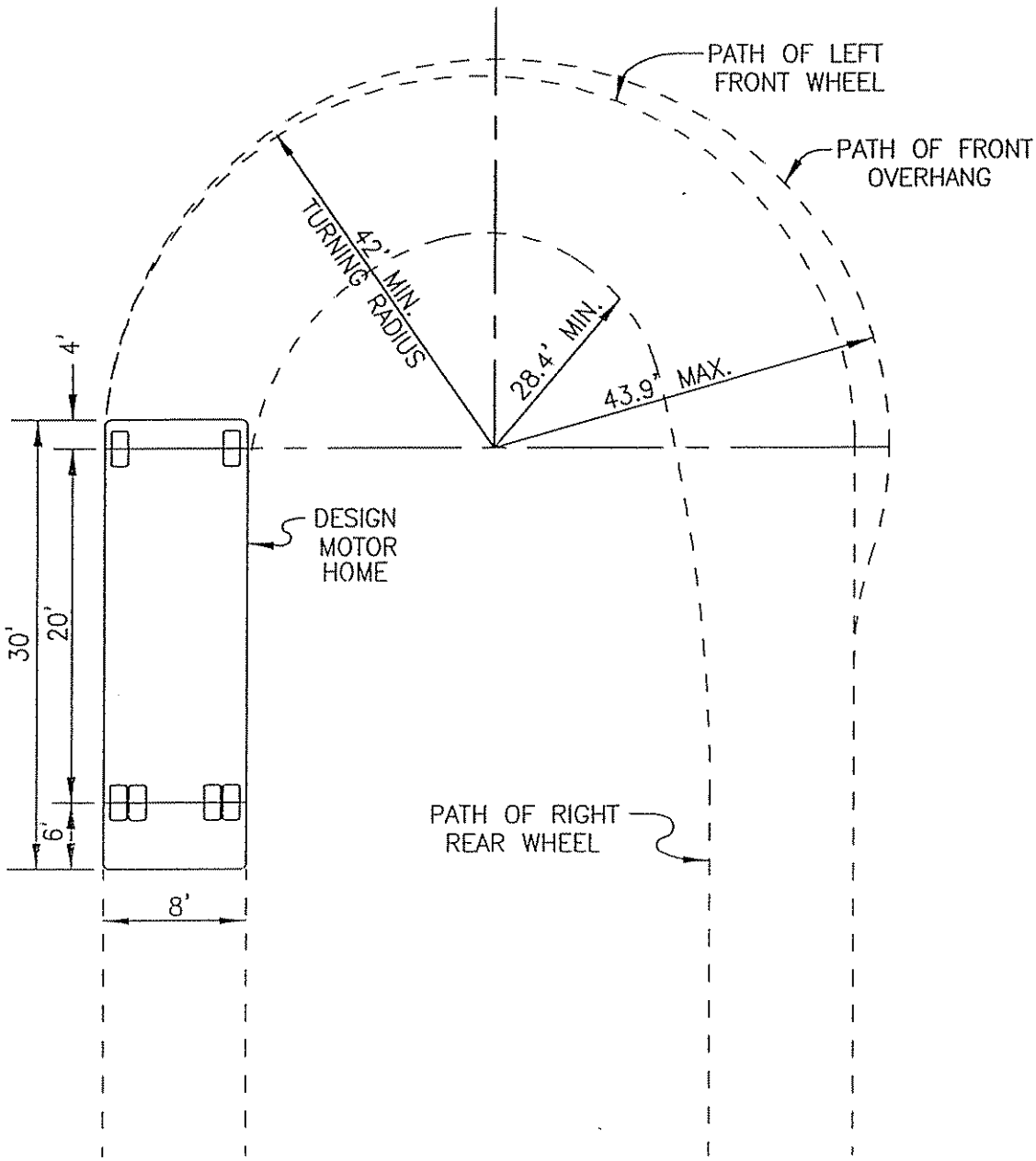

MINIMUM TURNING PATH FOR MH DESIGN VEHICLE

FIGURE V-5

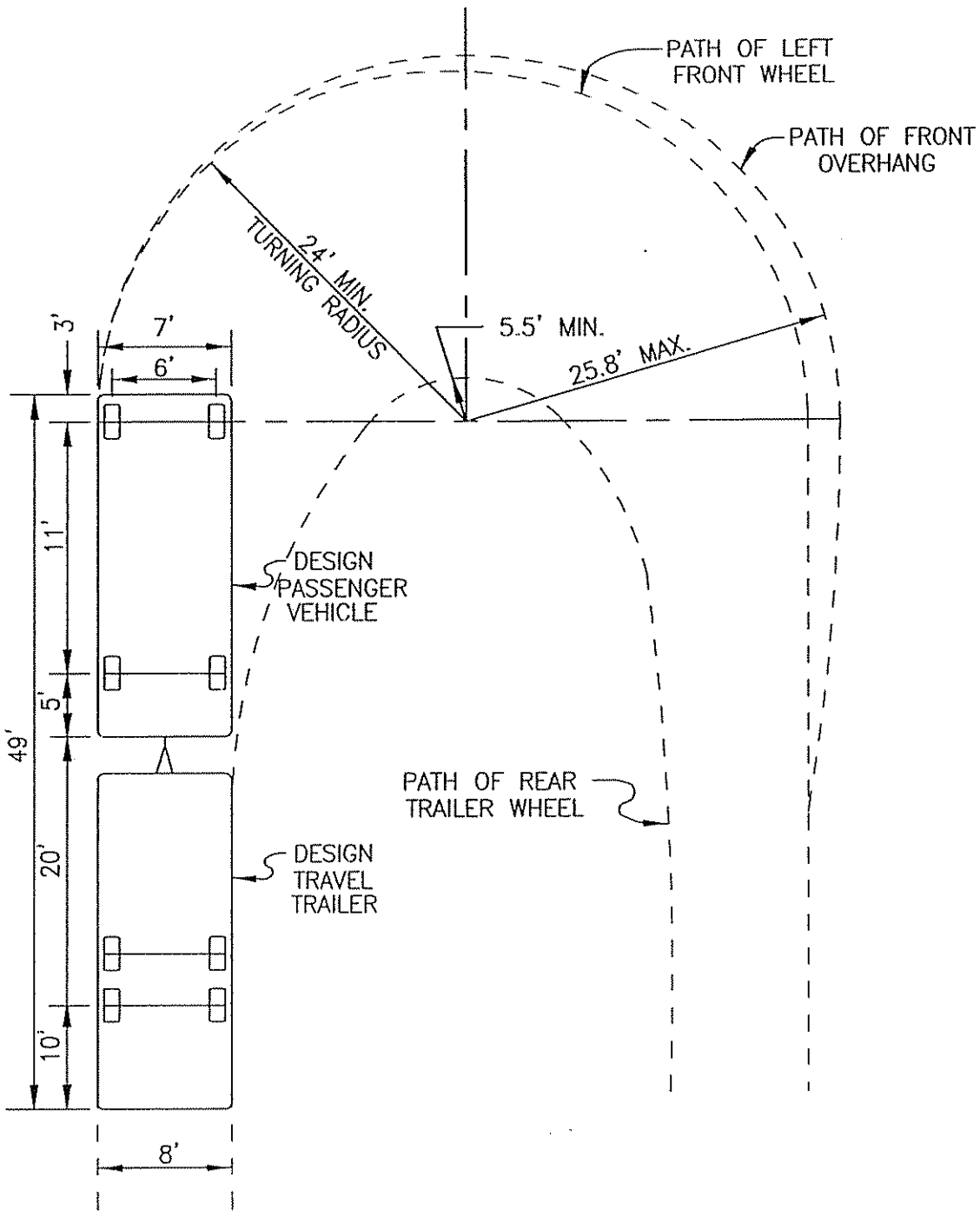

MINIMUM TURNING PATH FOR PT DESIGN VEHICLE

FIGURE V-6

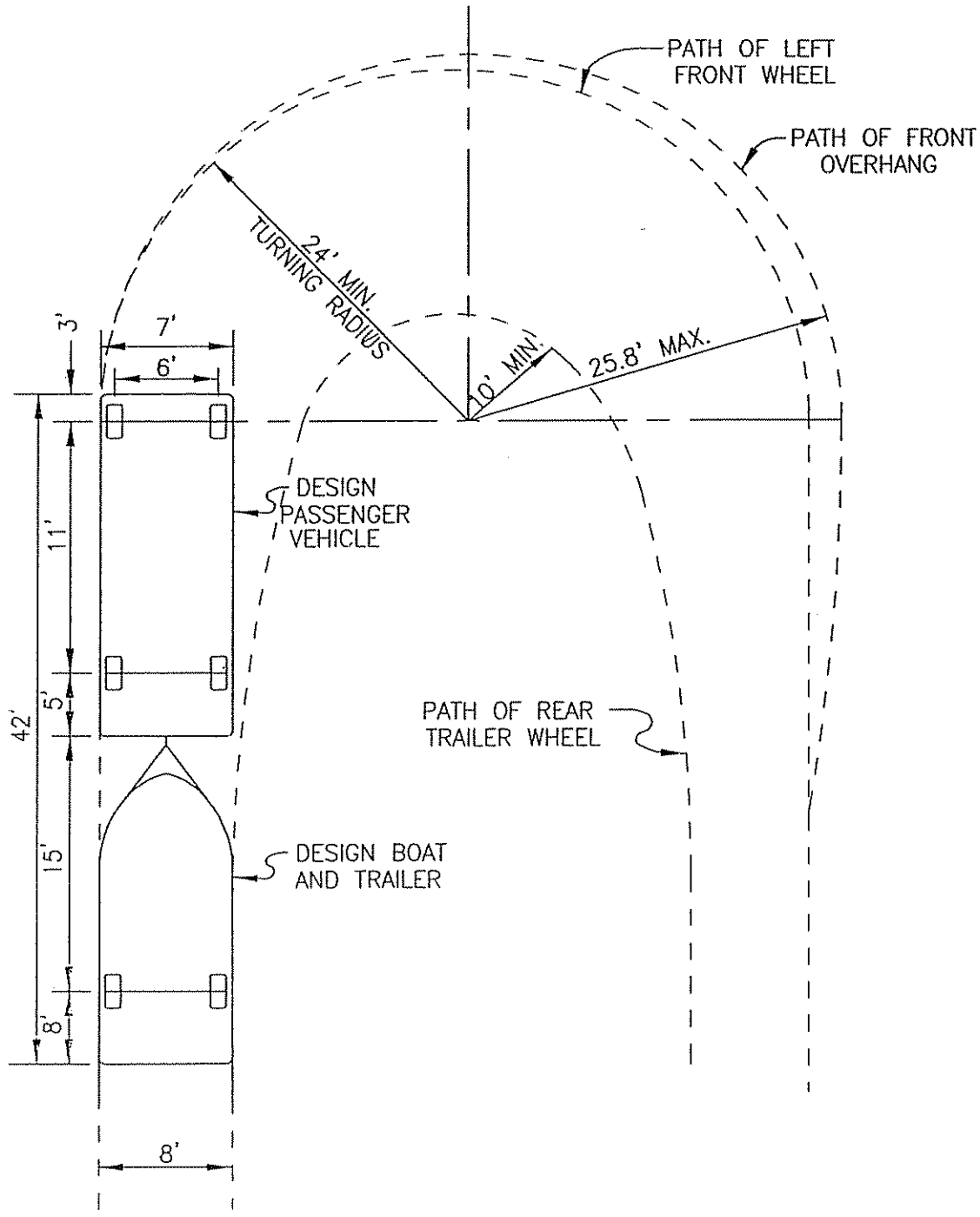

MINIMUM TURNING PATH FOR PB DESIGN VEHICLE

FIGURE V-7

Sight Distance

Minimum stopping sight distance and passing sight distance are a direct function of the design speed. The subject of sight distance for two-lane roads is covered in Chapter III; however, values are not included for cases of very low design speeds and two-directional one-lane roads. On one-lane roads enough sight distance must be available for one vehicle to reach a turnout or for both to stop before colliding. Criteria for measuring stopping sight distance for this type of road assumes a height of eye of 3.50 ft and a height of opposing vehicle of 4.25 ft. The stopping sight distance for a two-directional one-lane road is approximately twice the stopping sight distance for a two-lane road. Suggested stopping sight distances for two-directional one-lane roads are given in Table V-13.

TABLE V-13
MINIMUM STOPPING SIGHT DISTANCE

DESIGN SPEED (MPH)	10	20	30	40
Two-lane roads and single-lane roads (one directional)				
Stopping sight distance (ft)	50	125	200	275-325
K value[a] for:				
Crest vertical curve	2	10	30	60-80
Sag vertical curve	4	20	40	60-70
One-lane roads (two-directional)				
Stopping sight distance (ft)	100	250	400	-
K value[a] for:				
Crest vertical curve	3	20	52	-
Sag vertical curve	4	20	40	-

[a]K value is a coefficient by which the algebraic difference in grade may be multiplied to determine the length in feet of the vertical curve, which will provide minimum sight distance.

Passing Sight Distance

Because of low operating speeds and the nature of travel on recreational roads, frequent passing maneuvers are not anticipated. Nevertheless, minimum passing sight distance should be provided as frequently as possible, particularly on primary access roads where users travel considerable distances to reach activity sites. Passing sight distance is not a factor on one-lane roads. It is assumed that the slower vehicle will pull into a turnout and allow the faster vehicle to pass when necessary. Suggested minimum passing sight distances for two-lane roads are given in Table V-14.

TABLE V-14
MINIMUM STOPPING SIGHT DISTANCE
FOR TWO-LANE ROADS

DESIGN SPEED (MPH)	MINIMUM PASSING SIGHT DISTANCE (FT)[a]	K VALUE [b] CREST VERTICAL CURVE
20	800	210
30	1,100	400
40	1,500	730

[a]Minimum passing sight distance measured from driver's eye height of 3.50 ft to top of object 4.25 ft above pavement.

[b]K value is a coefficient by which the algebraic difference in grade may be multiplied to determine the length in feet of the vertical curve, which will provide minimum sight distance.

Grades

Grade design for recreational roads differs substantially from that for rural highways in that the weight/horsepower ratio of recreational vehicles (RV's) seldom exceeds 50 lb/hp, and this fact indicates that gradeability of RV's approaches that for passenger cars. Furthermore, because vehicle operating speeds on recreational roads are relatively low, large speed reductions on grades are not anticipated.

When grades are kept within the suggested limits, critical length of grade is not a major concern for most recreational roads. Critical length of grade may be a factor on recreational roads in the classification of primary access roads, and appropriate consideration should be given to this element of the design for these roads.

Table V-15 identifies suggested maximum grades for given terrain and design speed. Chapter III contains a more detailed discussion. The grades noted in Table V-15 relate primarily to operational performance of vehicles. A major item to be considered in selection of a maximum grade is the capability of the soil for erosion resistance. In many instances grades considerably less than those shown in Table V-15 should be chosen to satisfy this concern. In addition, type of surface should also be a factor in grade selection. Steep grades with dirt or gravel surfaces may cause driving problems in the absence of continued maintenance, whereas a bituminous surface will give better vehicle performance in general.

TABLE V-15
MAXIMUM GRADES (%) FOR RECREATIONAL ROADS

	DESIGN SPEED (MPH)			
TYPE OF TERRAIN	10	20	30	40
Level	8	8	7	7
Rolling	12	11	10	9
Mountainous	18	16	14	12

Vertical Alinement

Vertical curves should be safe, comfortable in operation, pleasing in appearance, and adequate for drainage. Minimum or greater stopping sight distance should be provided in all cases. The designer must exercise considerable judgment in constructing vertical curves, because lengths in excess of the minimum may be needed at driver decision points, where drainage or esthetic problems exist, or simply to provide an additional margin of safety.

Vertical curve design for two-lane roads is discussed in Chapter III, which also contains specific design values. Table V-13 also includes additional information for very low design speeds not tabulated elsewhere. For two-directional one-lane roads, crest vertical curves are significantly longer than those for two-lane roads. As previously discussed under the section on sight distance, the stopping sight distance for a two-directional one-lane road is approximately twice the stopping sight distance for a two-lane road. Table V-13 includes K values for one-lane roads, from which vertical curve lengths can be determined.

Horizontal Alinement

Because the use of straight sections of roadway would be physically impractical and (for recreational roads) esthetically undesirable, horizontal curves are necessary elements. The proper relationship between design speed and horizontal curvature and the relationship of both with superelevation are discussed in detail in Chapter III. The guidance provided in Chapter III is generally applicable to paved recreational-type facilities; however, in certain instances variations are appropriate. At locations where there is a tendency to drive slowly, as with local and some circulation roads, a maximum superelevation rate of 0.06 is suggested. On roads with design speeds of 20 mph or less, superelevation may not be warranted.

The design values for maximum curvature and superelevation discussed in Chapter III are based on friction data for paved surfaces. Some lower volume recreational facilities may not be paved, and because friction values for gravel surfaces are less than those for paved surfaces, friction values should be considered in curvature selection. Figure V-8 shows the relationship between minimum radius and superelevation for gravel-surfaced roads. This figure was developed by using f values from 0.12 at 10 mph to 0.10 at 30 mph.

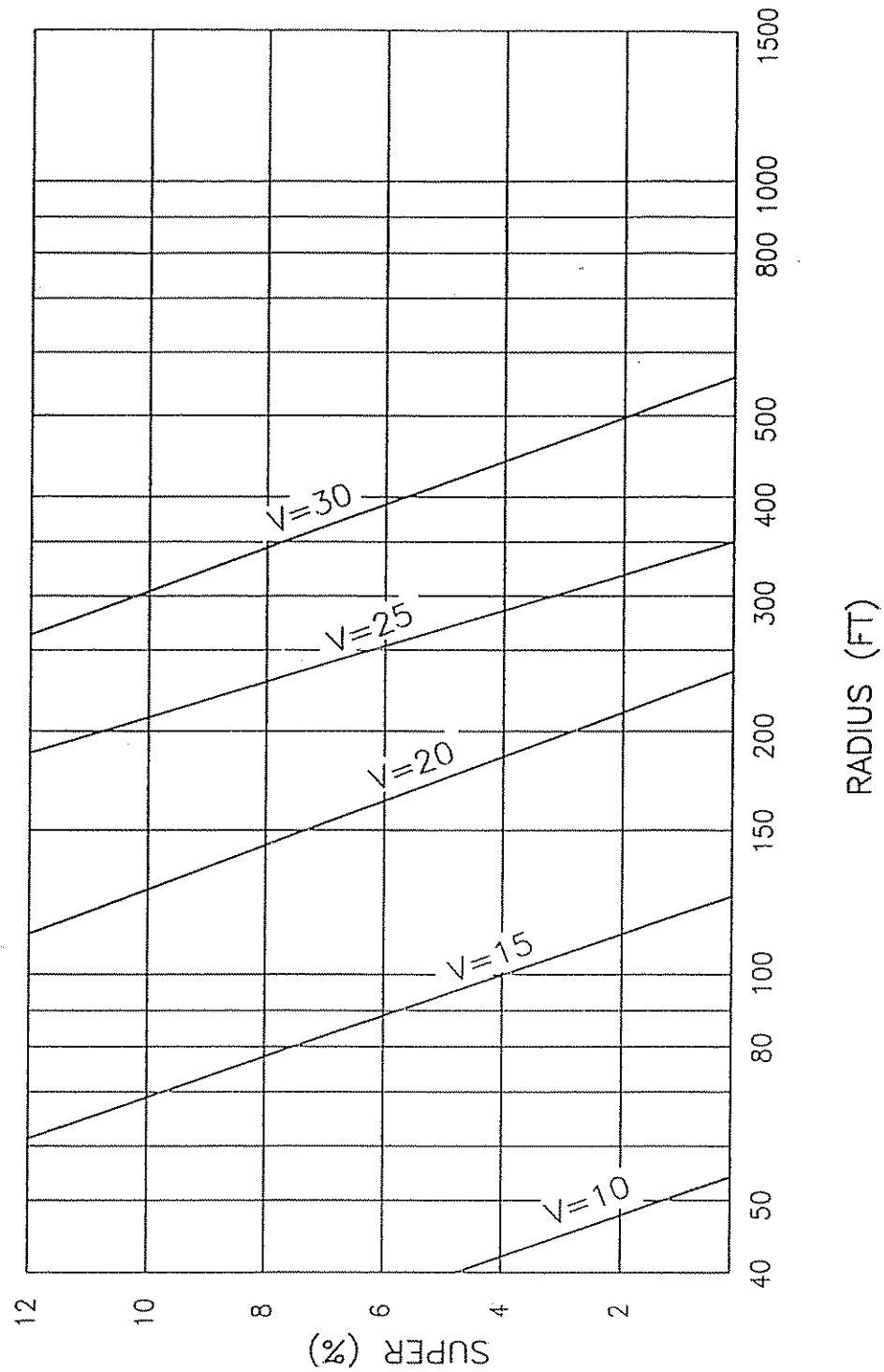

MINIMUM RADIUS FOR HORIZONTAL CURVE FOR GRAVEL SURFACE

FIGURE V-8

Number of Lanes

The number of lanes should be sufficient to accommodate the design traffic volume. For low-volume recreational roads, capacity conditions do not normally govern design; two travel lanes are appropriate. In some cases where traffic volumes are less than 100 vehicles per day, it may be feasible to use a two-directional one-lane roadway. This type of road is often desirable from an economic and environmental standpoint. When one-lane roadways with two-directional traffic are used, turnouts for passing should be provided. Traffic convenience requires that such turnouts be intervisible, provided on all blind curves, and supplemented as necessary so that the maximum distance between turnouts is no more than 1,000 ft. The turnouts should be a minimum of 10 ft. wide for a length of 50 ft. and should have a 25-ft. taper on each end. For overwide and extra-long vehicles the values should be adjusted to accommodate the usage. Figure V-9 shows a typical design that may be used for turnouts on tangent and curve sections for two-directional one-lane roads.

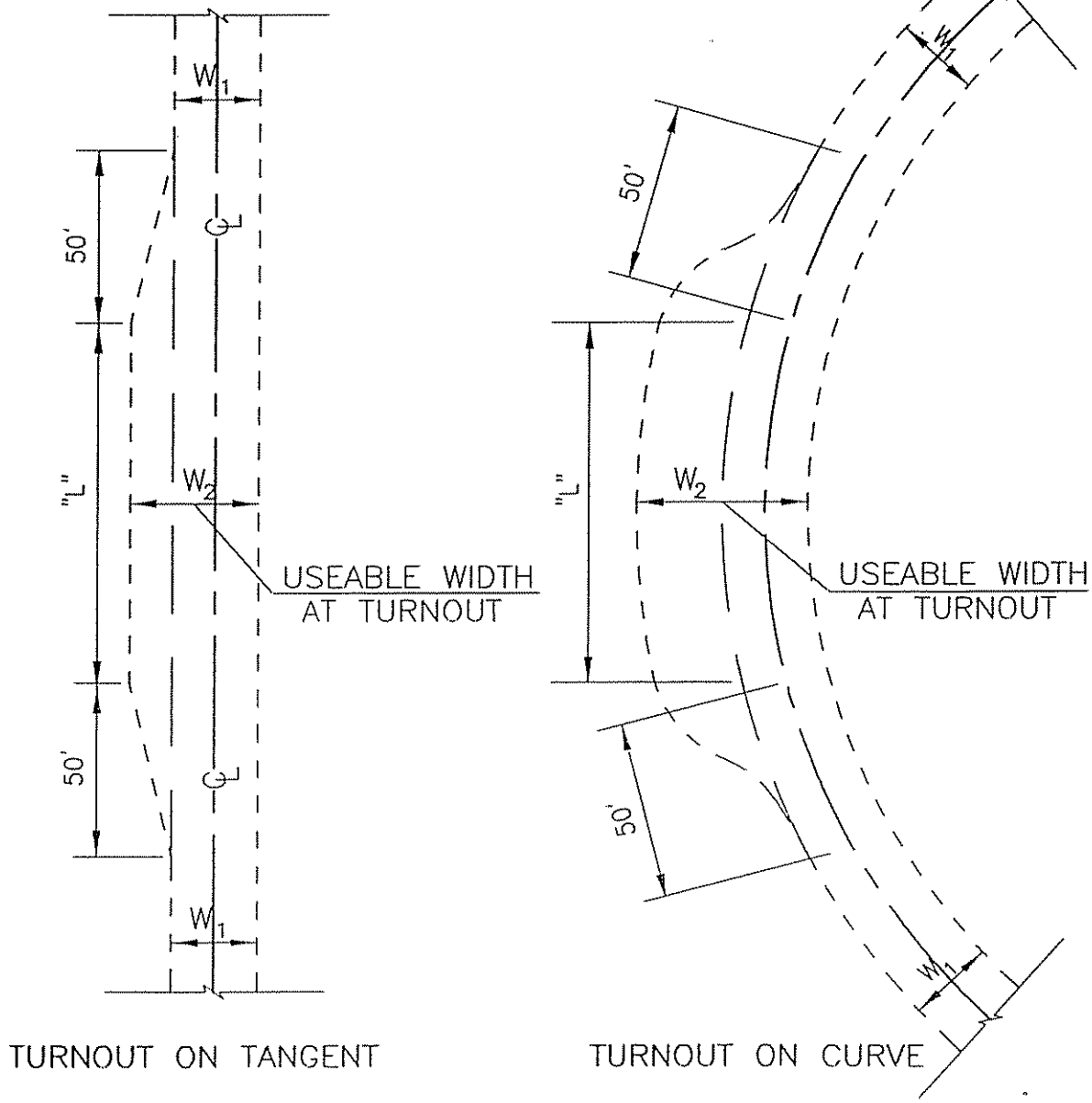

TURNOUT DESIGN

FIGURE V-9

Widths of Traveled Way, Shoulder, and Roadway

A roadway is defined as that portion of the highway including shoulders for vehicular use. Proper roadway width is selected on the basis of numerous factors including existing and anticipated vehicular and bicycle traffic, safety, terrain, and design speed. Table V-16 gives recommended traveled way widths and shoulder widths for the various types of roadways. The sum of the traveled way and shoulder widths given in Table V-16 constitutes the roadway width.

The low operating speeds and relatively low traffic volumes on recreational roads do not warrant wide shoulders. In addition, wide shoulders may be esthetically objectionable. These facts and concerns are reflected in the shoulder width values given in Table V-16. Under adverse terrain conditions, intermittent shoulder sections or turnouts may be suitable alternatives to continuous shoulders, particularly on lower functional roadway classes. Where guardrail is used, the graded width of the shoulder should be increased about 2 ft.

TABLE V-16
WIDTHS OF TRAVELED WAY AND SHOULDER

TYPE	TRAVELED WAY WIDTH (FT)[a]	SHOULDER WIDTH (FT)
Primary Access Roads (two lanes)	22-24	2-4
Circulation Roads (two lanes)	20-22	2-4
Area Roads (two lanes)	18-20	0-2
Area Roads (one lane)[b]	12	0-1

[a]Widening on the inside of sharp curves should be provided. Additional width equal to 400 divided by the curve radius in feet is recommended.

[b]Roadway widths greater than 14 ft should not be used because of the tendency for drivers to use the facility as a two-lane road.

Surface Crown

Surface cross slope must be provided to ensure adequate drainage. However, excessive surface sloping can cause steering difficulties.

Cross slope rates given in the first section of this chapter are generally applicable to recreational roads.

On one-lane roads with low-type surfaces, a crown would not usually be provided. Roads of this type would be inslope graded (toward the cut ditch) or outslope graded (toward the embankment fill), depending on the resistance of the soil to erosion. Where the soil is unstable and subject to major erosion, inslope grading should be used. Foreslope or backslope grading should exceed the horizontal gradient of the road to a maximum of 5 percent.

Clear Recovery Area

Providing a clear zone adjacent to a road involves a trade-off between safety and esthetics. A driver who leaves the road should be provided a reasonable chance to regain control and avoid serious injury. On the other hand, the philosophy of recreational roads dictates that natural roadside features be preserved where possible. Because of the character of the traffic and the relatively low operating speeds on recreational roads, wide clear zones are not as important as on high-speed, high-volume facilities. For these reasons, dimensions smaller than those used on these higher order roads are appropriate. Desirably, 10 or more ft. of recovery area, measured from the edge of the traffic lane, should be provided on the higher order recreational roads, i.e., the primary access roads. These values are recommended for the general case: however, where economic and environmental concerns are great, even smaller values are appropriate. Clear zone widths on the lower order recreational roads, i.e., circulation roads and areas, are even less critical than on primary access roads. In areas where the accident potential is greater than normal, such as on the outside of sharp horizontal curves at the end of long, steep downgrades, liberal clear zone widths should be provided.

Roadside Slopes

Where terrain conditions permit, blackslopes, foreslopes, and roadside drainage channels should have gentle well-rounded transition. Foreslopes of 4:1 or flatter are safer, stable, and permit establishment and maintenance of turf. The maximum rate of foreslope depends on terrain conditions and the stability of local soils as determined by local experience. Cut sections should be designed with adequate ditches.

The ditch should be deep enough to accommodate the design flow and provide for satisfactory drainage of the pavement base and sub-base. While foreslopes of 4:1 or flatter are preferable, there are other important considerations in ditch design for recreational roads. Surrounding terrain and physical feature preservation may dictate narrow width ditches. The lower speeds prevailing on recreational roads reduce the chance of personal injury for passengers in vehicles which drive into shallow-sided ditches.

Roadside Barrier

Roadside barriers should be installed at points of unusual danger, particularly those points that are unusual compared with the overall characteristics of the road. The criteria used in freeway design do not fit the low-volume recreational road situation. The AASHTO *Guide for Selecting, Locating, and Designing Traffic Barriers* (8) provides some insight into the application of roadside barriers on low-speed, low-volume facilities.

Signing and Marking

Although safety and efficiency of operation depend to a major extent on the geometric design of a road, they should be supplemented by standard signing and marking to provide information and warning to drivers. The extent to which signs and markings are used depends on the traffic volume, the type of highway, and the frequency and use by drivers unfamiliar with the area. The MUTCD (2) contains details regarding design, location , and application of highway signs and markings.

Structures

The design of bridges, culverts, walls, tunnels, and other structures should be in accordance with the AASHTO *Standard Specifications for Highway Bridges* (1). The minimum design loading for new bridges should be H-15. Higher design loadings are appropriate for highways carrying other than just recreational traffic. The vertical clearance at underpasses should be at least 14 ft. Over the entire roadway width. The clear roadway widths for new and reconstructed bridges should be a minimum of the surface width plus 4 ft. Where the approach roadway is surfaced for the full crown width, that surfaced width should be carried across structures.

RESOURCE DEVELOPMENT ROADS

Resource development roads include mining and logging roads. Design criteria appropriate for this type of road in many areas are not significantly different from those for recreational roads. For this reason the criteria developed for recreational roads should be followed to the extent that they are applicable. Several items are unique to this category of road and deserve special attention.

Traffic on this type of road is primarily composed of large, slow-moving, heavily loaded vehicles. For this reason, particular attention should be paid to superelevation of horizontal curves. The center of gravity of trucks is much higher than that of passenger cars, and this fact increases the tendency of trucks to overturn. When semitrailers are used, only part of the payload is on the drive axles. This situation increases the tendency of the drive wheels to spin and sideslip on slippery surfaces. For these reasons the maximum superelevation should be limited to 6 percent. On long sustained grades averse to the direction of haul, the superelevation should be reduced to accommodate the slow truck.

Gradients of this type of facility have an effect on the road maintenance costs and costs to users. An economic analysis is usually necessary to determine the most economical grade for the specific conditions encountered. Such an analysis must consider the increase in culvert installations to prevent ditch erosion on steeper grades and the more frequent surface replacement needs. Adverse grades are special problems on roads planned for heavy hauling. Sections of adverse grades should not be so long that they slow a loaded truck to crawl speed. Except for short sections that can be overcome largely by momentum, adverse grades merit special analysis. In many instances, failure to use flatter grades may result in additional expenses for transportation during the life of the road far in excess of any saving in construction costs.

Geometric design features for resource development roads are similar to those for recreational roads in that they must be consistent with the design speed selected. Low design speeds 40 mph or below are generally applicable to roads with winding alinement in rolling mountainous terrain. Table V-17 lists those minimum design speeds for both one- and two-lane roads for varying terrain conditions.

Because of the mechanical limitations of many of the vehicles using these roads, special attention should be given to the need for warning signs and markings. On long descending grades, consideration should be given to providing escape lanes to decelerate heavy vehicles that lose their brakes and run out of control. Deceleration may be artificially induced by the use of loose material or providing combinations of sufficient length and upgrade for freewheeling deceleration.

Many design considerations for resource development roads are based on the economics of the equipment operating on the facility. The effects of grades and curvature on operational cost are discussed in considerable detail in the *Logging Road Handbook* (9).

In many instances, resource development roads are ultimately used for other (e.g., recreational) purposes. In instances such as these, the original design should take into account all the possible ultimate usages.

TABLE V-17
MIMIMUM DESIGN SPEEDS FOR
RESOURCE DEVELOPMENT AND LOCAL SERVICE ROADS

TYPE OF TERRAIN	SINGLE LANE 100 VPD MAXIMUM MPH)	TWO LANE (MPH)
Level	30	40
Rolling	20	30
Mountainous	10	20

LOCAL SERVICE ROADS

Local service roads are those serving isolated areas that have little or no potential for further development (or that require a higher type facility if further developed) and those serving a minimal number of parcels of land. Most of these roads will not be through roads (connected to public roads on both ends) but will dead end at the service to the last parcel on the road.

Traffic on this type of road is of very low volume (fewer than 100 vehicles per day) and is of a repeat type. The design criteria, therefore, can be basically the same as those developed for recreational roads. Those criteria should be followed where applicable.

CHAPTER 3

MAPPING

AND

SURVEYING

CHAPTER 3 - MAPPING AND SURVEYING

A. MAPPING AND SURVEYING

All final maps, parcel maps, and record of surveys shall conform to the requirements set forth in this chapter, unless provided for in the current Subdivision Map Act and Land Surveyors Act.

1. Mapping

The scale of the map shall not be less than one inch equals one hundred feet (1" = 100'), except that an alternate scale may be approved by the County Surveyor.

The minimum height of all lettering shall be 1/8 inch hand or 1/10-inch machine lettered.

When the map consists of more than three sheets, exclusive of the certificate sheet, a key map showing the relation of the sheets shall be placed on the first map sheet. The sheets shall be numbered beginning with the certificate sheets then continuing with the map sheets.

Dimensions of lots shall be given as total dimensions, corner to corner, and shall be shown in feet and hundredths of a foot. No ditto marks shall be used. Lots containing one acre or more shall show acreage to nearest hundredth. Lots of less than one acre shall show square footage. Gross and net areas will be shown on all parcels smaller than 2 acres.

Final Map and Parcel Maps shall contain a title consisting of the assigned tract number and name, and a sub-title or general description of all the property being subdivided. Reference to previous maps of record shall be given.

The map shall show clearly what stakes, monuments or other evidence were found on the ground to determine the boundaries of the subdivision. All adjoining subdivisions shall be identified by lot and block numbers, subdivision name and place of record, or other proper designation.

The bearing and length of every lot line, block line and boundary line shall be shown. Bearing and lengths of tangents, and radii, arc length, and delta for all curves as may be necessary to determine the location of the center of curves and tangent points shall be shown. All radial lines shall be identified.

All lots and or parcels shall be identified as such and/or numbered or lettered on the Final or Parcel Map. If the lots or parcels are numbered, they shall begin with the number "1" and shall continue consecutively in numeric order throughout the subdivision with no omissions or duplications. If the lots or parcels are lettered, they shall begin with the letter "A" and shall continue consecutively in alphabetical order throughout the subdivision with no omissions or duplications.

Whenever the Director of Public Works and/or City Engineer have established the center line of a street or alley adjacent to or in the proposed subdivision, the record data shall be shown on the map indicating all monuments found or not found or reset. If the points were reset by ties, the course and detail of relocation data used shall be stated.

Final Maps or Parcel Maps shall show all easements to which the lots are subject. The easements must be clearly labeled by solid capital letters and identified, and if already of record, the record reference given. If any easement is not definitely located by record, a statement of such must appear on the map sheet. Easements shall be denoted by fine dashed lines. The width of the easement and the lengths and bearings of the lines thereof and sufficient ties thereto to definitely locate the easement with respect to the subdivision must be shown. If the easement is being dedicated by the map, it shall be properly referenced in the owner's certificate of dedication.

Boundary lines of all political subdivisions crossing or bounding the subdivision shall be clearly designated and referenced.

Map accuracy shall be such that any and all calculated closures shall be 1 in 10,000 or greater.

2. Checking and Filing

A complete set of calculations shall be submitted with the initial check set for all maps submitted for review. The calculations may be done by hand or by computer. In either case, they shall include at least the following: all corresponding points shall be labeled on both the check prints and the calculations, courses and closures for all lots, roads, easements, aliquot parts of sections shown, and for the exterior boundary of the entire subdivision, and acreages for all lots.

Maps to be recorded shall be legibly drawn, printed, or reproduced by a process guaranteeing a permanent record in black on tracing cloth, or polyester base film, 18 by 26 inches. If ink is used on polyester base film, the ink surface shall be coated with a suitable substance to assure permanent legibility. A one-inch blank margin shall be left on each edge of the map.

Only copies with the original signatures will be accepted. Signatures on acknowledgements must be exactly the same as on Owner's Certificate and must be written in black permanent ink.

No certificate stick-ons will be accepted and no stick-on shaded film to denote greenbelt areas or other purposes will be accepted.

3. Fees

At the time the Final Map, Parcel Map, Parcel Map Waiver documents, Record of Survey, Amending Map, Certificate of Correction or Corner Record is submitted for checking, the map checking fees shall be deposited with the Department of Public Works in an amount established by the Board of Supervisors by resolution. Recording fees are to be paid prior to recording.

4. Surveying

a. Basis of Bearings

Each map shall contain a Basis of Bearings Note which includes the description and bearing of the line used as the basis and:

The record data of the map or document from which it was obtained, or

A statement that said bearing is based on either a solar or polaris observation.

The following are acceptable basis of bearings:

1) Recorded Maps.

2) Astronomical Observation.

3) California Coordinate System. Maps with this basis of bearing shall also include a control scheme through which the coordinates were determined from points of known coordinates.

4) Government Records and other records as approved by the County Surveyor.

b. Accuracy

All field survey accuracy shall be in compliance with acceptable surveying practices.

c. Monuments

All lot corners shall be monumented in subdivisions, with the exception of parcel maps creating four or fewer parcels which may be compiled from record data providing the criteria set forth in the Subdivision Map Act, Chapter 2 - Maps, Article 3, Parcel Maps, paragraph 66448, is met. In addition, monuments shall be set at all angle and curve points on the exterior boundaries and on the right of way line. Shasta County standard centerline monuments shall be set at all street intersections and terminations. Additional monumentation may be required if determined necessary, by the County Surveyor, to perpetuate or facilitate re-establishment of any point or line of the survey.

Permanent elevation bench marks referring to an approved datum may be required to be set at a location approved by the County Surveyor.

Any monument or bench mark, as required by these specifications that is disturbed or destroyed before acceptance of all improvements, shall be replaced by the subdivider.

All monuments shall be of a permanent type. The following are approved as permanent:

1) Concrete monument with brass cap.
2) 1/2" or larger pipe with tag or cap permanently attached.
3) 1/2" steel bar with tag or cap.
4) "T" bar with tag permanently attached.
5) Other as approved by the County Surveyor.

NOTE: Center line monuments shall meet County standards as shown in Appendix 3-1 of these Development Standards.

5. Certificates and Statements

a. The following certificates will be required on subdivisions requiring a Final Map.

OWNERS'S STATEMENT

(i) (WE) HEREBY CERTIFY THAT (i) (WE) (AM) (ARE) THE OWNER(s) OF, OR HAVE SOME RIGHT, TITLE, OR INTEREST IN AND TO THE REAL PROPERTY INCLUDED WITHIN THE BOUNDARY SHOWN UPON THIS MAP, AND THAT (i) (WE) (AM) (ARE) THE ONLY PERSON(s) WHOSE CONSENT IS NECESSARY TO PASS A CLEAR TITLE TO SAID PROPERTY, AND (i) (WE) CONSENT TO THE PREPARATION AND RECORDATION OF SAID MAP AS SHOWN WITHIN THE COLORED BORDER LINES AND HEREBY DEDICATE FOR PUBLIC USE (obtain dedication wording from county).

By _____ By _____

By _____ By _____

The Certificates of Acknowledgements must be substantially in the form of the following:

State of _____)
) ss.
County of _____)

On _____ before me, _____,
DATE NAME, TITLE OF OFFICER, E.G. "JANE DOE, NOTARY PUBLIC"
personally appeared _____,

personally known to me OR proved to me on the basis of satisfactory evidence to be the person(s) whose name(s) is/are subscribed to the within instrument and acknowledged to me that he/she/they executed the same in his/her/their authorized capacity(ies), and that by his/her/their signature(s) on the instrument the person(s), or the entity upon behalf of which the person(s) acted, executed the instrument.

Witness my hand and official seal.

_____
SIGNATURE OF NOTARY SEAL

_____
COUNTY

STATEMENT OF CLERK OF
BOARD OF SUPERVISORS

I, _____, CLERK OF THE BOARD OF SUPERVISORS OF COUNTY OF SHASTA, HEREBY CERTIFY THAT SAID BOARD APPROVED THE WITHIN MAP ON THE _____ DAY OF _____, 19___, AND ACCEPTED ON BEHALF OF THE PUBLIC, ALL PARCELS OF LAND OFFERED FOR DEDICATION FOR _____ _____ (obtain wording from county).

BY_____

CLERK OF THE BOARD OF SUPERVISORS
OF THE COUNTY OF SHASTA, STATE OF CALIFORNIA

BY _____
Deputy

STATEMENT OF APPROVAL BY SECRETARY OF
SHASTA COUNTY PLANNING COMMISSION

I, _____, SECRETARY OF SHASTA COUNTY PLANNING COMMISSION, HEREBY CERTIFY THAT I HAVE EXAMINED THIS MAP, THAT THE SUBDIVISION AS SHOWN HEREON IS SUBSTANTIALLY THE SAME AS IT APPEARED ON THE TENTATIVE MAP, AND ANY APPROVED ALTERATIONS THEREOF AS APPROVED BY THE SHASTA COUNTY PLANNING COMMISSION, ON _____, 19___.

_____ _____
SECRETARY, SHASTA COUNTY PLANNING COMMISSION DATE

STATEMENT OF APPROVAL BY COUNTY SURVEYOR

I, _____, COUNTY SURVEYOR OF SHASTA COUNTY, HEREBY CERTIFY THAT I HAVE EXAMINED THIS MAP; THAT THE SUBDIVISION AS SHOWN HEREON IS SUBSTANTIALLY THE SAME AS IT APPEARED ON THE TENTATIVE MAP AND ANY APPROVED ALTERATION THEREOF AS APPROVED BY THE SHASTA COUNTY PLANNING COMMISSION ON _____, 19___; THAT ALL THE PROVISIONS OF THE CALIFORNIA "SUBDIVISION MAP ACT," AS AMENDED, AND OF THE SHASTA COUNTY ORDINANCE CODE, APPLICABLE AT THE TIME OF APPROVAL OF SAID TENTATIVE MAP, HAVE BEEN COMPLIED WITH AND THIS MAP IS TECHNICALLY CORRECT.

_____

COUNTY SURVEYOR, SHASTA COUNTY, CALIFORNIA

BY_____ _____

DEPUTY COUNTY SURVEYOR DATE

STATEMENT OF COUNTY DIRECTOR OF ENVIRONMENTAL HEALTH

I, _____, DIRECTOR OF ENVIRONMENTAL HEALTH OF SHASTA COUNTY, HEREBY CERTIFY THAT ALL HEALTH AND SANITATION CONDITIONS ESTABLISHED ON THE TENTATIVE MAP AND ANY APPROVED ALTERATION THEREOF AS APPROVED BY THE SHASTA COUNTY PLANNING COMMISSION ON _____, 19___; HAVE BEEN MET OR GUARANTEED.

_____ _____

SHASTA COUNTY DIRECTOR OF ENVIRONMENTAL HEALTH DATE

STATEMENT OF COUNTY TAX COLLECTOR

I, _____, TAX COLLECTOR OF SHASTA COUNTY, HEREBY CERTIFY THAT THERE ARE NO LIENS FOR UNPAID STATE, COUNTY, OR LOCAL TAXES OR SPECIAL ASSESSMENTS AGAINST THE LAND INCLUDED IN THE WITHIN SUBDIVISION OR AGAINST ANY PART THEREOF EXCEPT TAXES OR SPECIAL ASSESSMENTS NOT YET PAYABLE AGAINST SAID SUBDIVISION OR ANY PART THEREOF, AND THAT THIS CERTIFICATE DOES NOT INCLUDE ANY ASSESSMENTS OF ANY ASSESSMENT DISTRICT, THE BONDS WHICH HAVE NOT YET BECOME A LIEN AGAINST SAID LAND OR ANY PART THEREOF.

_____ _____

TAX COLLECTOR, COUNTY OF SHASTA, CALIFORNIA DATE

STATEMENT OF REGISTERED CIVIL ENGINEER

I, _____, A REGISTERED CIVIL ENGINEER, HAVE PREPARED A SOILS REPORT, DATED _____, 19___, IN ACCORDANCE WITH THE SHASTA COUNTY ORDINANCE CODE, AND SAID REPORT IS ON FILE WITH THE SHASTA COUNTY DEPARTMENT OF PUBLIC WORKS, AND THE REPORT (DOES/DOES NOT) INDICATE THE PRESENCE OF CRITICALLY EXPANSIVE SOILS OR OTHER SOILS PROBLEMS, WHICH IF NOT CORRECTED COULD LEAD TO STRUCTURAL DEFECTS. SAID SOILS REPORT (DOES/DOES NOT) INCLUDE THE RECOMMENDED CORRECTIVE ACTION WHICH IS LIKELY TO PREVENT THE STRUCTURAL DAMAGE.

_____ _____

REGISTERED CIVIL ENGINEER OF STATE OF CALIFORNIA
R.C.E. _____

DATE

STATEMENT OF SURVEYOR OR ENGINEER

I, _____, (LICENSED LAND SURVEYOR) (REGISTERED CIVIL ENGINEER), HEREBY CERTIFY THAT THIS MAP CORRECTLY REPRESENTS A SURVEY MADE UNDER MY DIRECTION DURING _____, 19___, THAT THE SURVEY IS TRUE AND COMPLETE AS SHOWN (THAT THE MONUMENTS ARE OF THE CHARACTER AND OCCUPY THE POSITIONS INDICATED), (THAT THE MONUMENTS ARE OF THE CHARACTER AND THEY WILL BE SET IN SUCH POSITIONS ON OR BEFORE _____, 19___,) AND THAT THE MONUMENTS (ARE) (WILL BE) SUFFICIENT TO ENABLE THE SURVEY TO BE RETRACED.

_____

(LICENSED LAND SURVEYOR L.S.)
(CIVIL ENGINEER R.C.E.)

RECORDER'S STATEMENT

FILED THIS _____ DAY OF _____, 19___, AT _____ ___M., IN BOOK _____ OF MAPS AT PAGE _____
AT THE REQUEST OF _____.

SIGNED _____
SHASTA COUNTY RECORDER

BY _____
DEPUTY

FEE: _____

b. The following certificates will be required on subdivisions requiring a Parcel Map.

OWNER'S STATEMENT

(i) (WE) HEREBY CERTIFY THAT (i) (WE) (AM) (ARE) THE OWNER(s) OF, OR HAVE SOME RIGHT, TITLE, OR INTEREST IN AND TO THE REAL PROPERTY INCLUDED WITHIN THE BOUNDARY SHOWN UPON THIS MAP, AND THAT (i) (WE) (AM) (ARE) THE ONLY PERSON(s) WHOSE CONSENT IS NECESSARY TO PASS A CLEAR TITLE TO SAID PROPERTY, AND (i) (WE) CONSENT TO THE PREPARATION AND RECORDATION OF SAID MAP AS SHOWN WITHIN THE COLORED BORDER LINES AND HEREBY DEDICATE FOR PUBLIC USE (obtain dedication wording from county)

BY_____ BY_____

BY_____ BY_____

THE CERTIFICATES OF ACKNOWLEDGEMENTS MUST BE IN THE SAME FORM AS REQUIRED FOR FINAL MAPS.

RECORDER'S STATEMENT

FILED THIS _____ DAY OF _____, 19___, AT _____ ____M., IN BOOK _____ OF PARCEL MAPS AT PAGE _____ AT THE REQUEST OF _____.

SIGNED _____
SHASTA COUNTY RECORDER

BY _____
DEPUTY

FEE_____

STATEMENT OF DEDICATION

(Required only when dedications appear on map)

I, , DIRECTOR OF PUBLIC WORKS OF THE COUNTY OF SHASTA, UNDER THE AUTHORITY GRANTED TO ME BY THE BOARD OF SUPERVISORS OF COUNTY OF SHASTA ON JUNE 18, 1985, BY THE ADOPTION OF RESOLUTION NUMBER 85-144 ACCEPT ON BEHALF OF THE PUBLIC ALL OFFERS OF DEDICATIONS FOR (obtain wording from county).

SIGNED _____ _____

SHASTA COUNTY DIRECTOR OF PUBLIC WORKS — DATE

BY_____

ASSISTANT DIRECTOR

(ENGINEER'S) (SURVEYOR'S) STATEMENT

THIS MAP WAS PREPARED BY ME OR UNDER MY DIRECTION (AND WAS COMPILED FROM RECORD DATA) (AND IS BASED UPON A FIELD SURVEY) IN CONFORMANCE WITH THE REQUIREMENTS OF THE SUBDIVISION MAP ACT AND LOCAL ORDINANCE AT THE REQUEST OF (NAME OF PERSON AUTHORIZING MAP) ON (DATE). I HEREBY STATE THAT THIS PARCEL MAP SUBSTANTIALLY CONFORMS TO THE APPROVED OR CONDITIONALLY APPROVED TENTATIVE MAP, IF ANY.

(IF A FIELD SURVEY WAS PERFORMED ADD THE FOLLOWING STATEMENT)

(THAT THE MONUMENTS ARE OF THE CHARACTER AND OCCUPY THE POSITIONS INDICATED), OR (THAT THE MONUMENTS ARE OF THE CHARACTER AND THEY WILL BE SET IN SUCH POSITIONS ON OR BEFORE _____, 19___), AND THAT THE MONUMENTS (ARE) OR (WILL BE) SUFFICIENT TO ENABLE THE SURVEY TO BE RETRACED.

_____

LICENSED LAND SURVEYOR L.S. OR
CIVIL ENGINEER R.C.E.

STATEMENT OF COUNTY TAX COLLECTOR

I, _____, TAX COLLECTOR OF SHASTA COUNTY, HEREBY CERTIFY THAT THERE ARE NO LIENS FOR UNPAID STATE, COUNTY, OR LOCAL TAXES OR SPECIAL ASSESSMENTS AGAINST THE LAND INCLUDED IN THE WITHIN SUBDIVISION OR AGAINST ANY PART THEREOF EXCEPT TAXES OR SPECIAL ASSESSMENTS NOT YET PAYABLE AGAINST SAID SUBDIVISION OR ANY PART THEREOF, AND THAT THIS CERTIFICATE DOES NOT INCLUDE ANY ASSESSMENTS OF ANY ASSESSMENT DISTRICT, THE BONDS WHICH HAVE NOT YET BECOME A LIEN AGAINST SAID LAND OR ANY PART THEREOF.

_____ _____

TAX COLLECTOR, COUNTY OF SHASTA DATE
STATE OF CALIFORNIA

COUNTY SURVEYOR'S STATEMENT

THIS MAP CONFORMS WITH THE REQUIREMENTS OF THE SUBDIVISION MAP ACT AND LOCAL ORDINANCE.

DATED _____, 19_____

SIGNED _____
SHASTA COUNTY SURVEYOR

BY _____
DEPUTY

c. The following certificates and statements will be required on Records of Surveys.

SURVEYOR'S STATEMENT

THIS MAP CORRECTLY REPRESENTS A SURVEY MADE BY ME OR UNDER MY DIRECTION IN CONFORMANCE WITH THE REQUIREMENTS OF THE LAND SURVEYORS ACT AT THE REQUEST OF _____(OWNER)_____, ON _____DATE____.

SIGNED AND SEALED _____

L.S. (or R.C.E.) NO. _____

COUNTY SURVEYOR'S STATEMENT

THIS MAP HAS BEEN EXAMINED IN ACCORDANCE WITH SECTION 8766 OF THE LAND SURVEYORS ACT THIS _____ DAY OF _____19___.

SIGNED AND SEALED _____
SHASTA COUNTY SURVEYOR

BY_____
DEPUTY COUNTY SURVEYOR

L.S. (R.C.E.) NO. _____

RECORDERS STATEMENT

FILED THIS _____ DAY OF _____, 19___, AT _____M., IN BOOK _____ OF LAND SURVEYS AT PAGE _____, AT THE REQUEST OF _____.

SIGNED _____
SHASTA COUNTY RECORDER

BY_____
DEPUTY

FEE_____

6. Subdivision Guarantee Letter

Submittal of a subdivision guarantee letter shall comply with Chapter 3, Article 6, Section 66465 of the California Subdivision Map Act.

This is required when the Final Map or Parcel Map is submitted for recording. Owners' signatures shall be the same on the map as on the letter.

The subdivision guarantee letter must have been issued within 10 days of the recording date of the map.

7. Subdivision Final Map Checking and Filing Procedure

Tract No. _____ Subdivision Name _____

NOTE: All checking fees are due and payable upon first submittal.

_____A First Submittal (Signatures not required at this time.)

1. Four blueline sets (all sheets)

   a. One set for County Department of Resource Management's Planning Division
   b. One set for County Department of Resource Management's Environmental Health Division
   c. Two sets for Department of Public Works

2. One set of calculations with all corresponding points labeled on both the calculations and one blueline set.

   a. The calculation shall be complete and include courses and closures for all lots, roads, easements, aliquot parts of sections shown, and for the exterior boundary of the entire subdivision. The calculations shall also show all lot acreages.

_____B. Each Additional Submittal

1. Clean blueline set(s) as required for clearance by Department of Public Works, County Department of Resource Management's Planning and Environmental Health Divisions.
2. All previously checked blueline sets and calculations.
3. Any additional data as requested.
4. All original sheets must be taken by the applicant or his representative to each department for signature once clearance has been obtained.

_____C. Submittal for Board of Supervisors' approval when all conditions have been met and all signatures have been obtained.

1. One clean blueline set (all sheets)
2. All previously checked blueline sets.
3. Request scheduling for approval of Board of Supervisors

_____D. Submittal for filing **AFTER** Board of Supervisors' approval of map.

1. One original mylar set
2. One sepia set (at option of engineer)
3. One original (Final) Subdivision Guarantee Letter
4. Five blueline sets
5. Recording Fees (payable to Shasta County Recorder)
6. All previously checked blueline sets and calculations

Date taken to Recorder by DPW _____

Recording Data _____

8. Parcel Map Checking and Filing Procedure

P.M._____

Engineer _____Sec._____T._____N.,R._____ PBRG

NOTE: All checking fees are due and payable upon first submittal.

____A. First Submittal (Signatures not required at this time.)

1. Four blueline sets (all sheets)

   a. One set for County Department of Resource Management's Planning Division
   b. One set for County Department of Resource Management's Environmental Health Division
   c. Two sets for Department of Public Works

2. One set of calculations with all corresponding points labeled on both the calculations and one blueline set.

   a. The calculation shall be complete and include courses and closures for all lots, roads, easements, aliquot parts of sections shown, and for the exterior boundary of the entire subdivision. The calculations shall also show all lot acreages.

____B. Each Additional Submittal

1. Clean blueline set(s) as required for clearance by the Department of Public works.

2. <u>All</u> previously checked blueline sets and calculations

3. Any additional data as requested.

____C. Submittal when roads are completed or bonded, all agreements signed and all fees paid and approved by the Department of Public Works.

1. One original mylar set

2. One sepia set (at option of engineer)

3. One original (Final) Subdivision Guarantee Letter

4. Recording Fee (payable to Shasta County Recorder)

5. <u>All</u> previously checked blueline sets and calculations.

6. Three clean blueline sets.

Date taken to Recorder by DPW _____

Recording Data _____

9. Record of Survey Checking And Filing Procedure

Engineer_____For_____Sec.____T.___N.,R____(PBRG)

NOTE: All checking fees are due and payable upon first submittal.

_____A. First Submittal

1. One blueline set
2. One set of calculations with all corresponding points labeled on both the calculations and one blueline set.

_____B. Each Additional Submittal

1. One clean blueline set
2. **All** previously checked blueline sets

_____C. For Filing

1. One original mylar set
2. One sepia set (at option of engineer)
3. **All** previously checked blueline sets
4. Recording Fee (Payable to Shasta County Recorder)

Date taken to Recorder by DPW _____

Recording Data _____

NOTES

1. LOWER SECTION TO BE POURED 12 HOURS PRIOR TO THE UPPER SECTION
2. ALL CONCRETE SHALL BE CLASS B, 5 SACKS PER CUBIC YARD.
3. MONUMENT FRAMES AND COVERS SHALL BE PHOENIX IRON WORKS, PART P-2001 OR EQUIVALENT.
4. MONUMENT FRAMES AND COVERS SHALL CONFORM TO ASTM SPEC. A159-64T-G3000 OR U.S. GOVERNMENT SPEC. QQ1-653.
5. CONCRETE SHALL BE PLACED AGAINST UNDISTURBED MATERIAL.

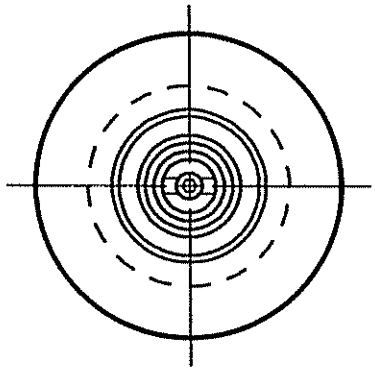

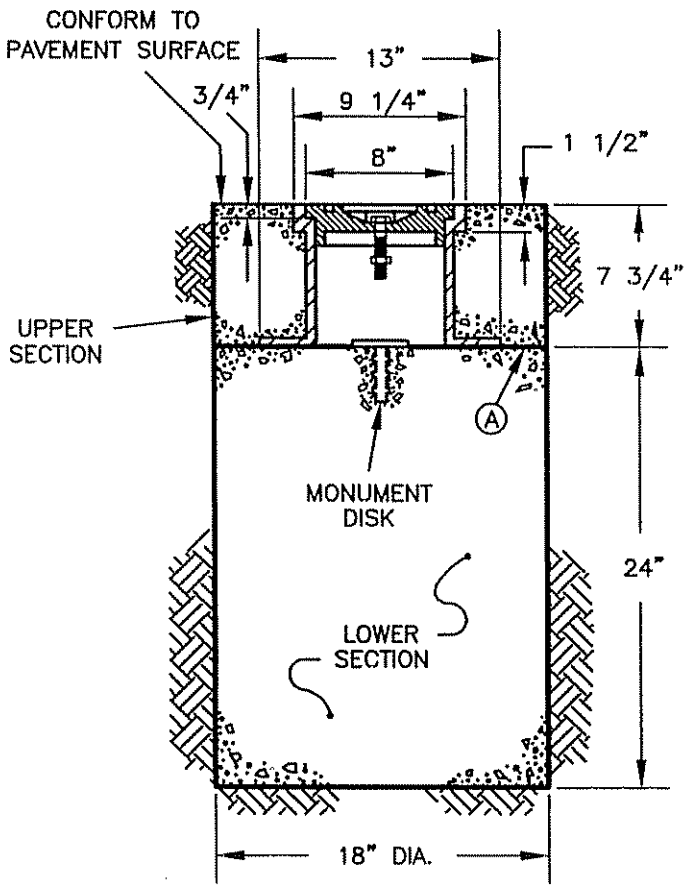

Ⓐ TROWELED SMOOTH SURFACE AND APPLY AN APPROVED ANTIBONDING AGENT.

SCALE: NTS	DATE: 1996	SHASTA COUNTY DEPARTMENT OF PUBLIC WORKS
		APPROVED BY: William E. Lyman
MARK / DATE / REVISION		WILLIAM E. LYMAN

CENTERLINE MONUMENT
COVER ASSEMBLY AND INSTALLATION

CHAPTER 4

GRADING

AND

EROSION CONTROL

STANDARDS

CHAPTER 4 - GRADING AND EROSION CONTROL

A. GENERAL

1. Purpose

The purpose of this chapter is to promote and protect the public safety, convenience, comfort, prosperity, general welfare and the county's natural resources by establishing minimum requirements for grading, excavating, and filling in order to:

a. Control erosion and sedimentation and prevent damage to off-site property and streams, water-courses, and aquatic habitat;

b. Avoid creation of unstable slopes or filled areas;

c. Prevent impairment or destruction of potential leach fields for sewage disposal systems;

d. Regulate de facto development caused by uncontrolled grading.

2. Definitions

For the purposes of this chapter, the following words and terms have the meanings indicated, unless the context in which any word or term is used or a specific provision of this code requires another meaning:

a. Earth material means any soil, sand, gravel, decomposed granite, rock organic or mulch cover, or other natural material or fill.

b. Enforcing officer is the person or body so designated by the Board of Supervisors.

c. Grading means movement of any earth materials:

(1) In excess of two hundred fifty cubic yards; or

(2) Which damages or has the potential to significantly damage directly, or indirectly through erosion, any natural or manmade watercourse, whether year-round or intermittent, including drainage channels; or

(3) To make a road, temporary access road, building pad, mobile home pad or a new sewage disposal system when the installation of the sewage disposal system requires changes in the natural contour of the land; or

(4) Which disturbs 10,000 square feet or more of surface area.

d. Grading permits are identified as "Major Project" or "Minor Project" permits. "Major Project" permits shall be required for any grading which will involve 1) the movement of more than 2,000 cubic yards of earth, 2) the disturbance of more than five acres of earth material and/or 3) is defined as a discretionary permit (excludes grading permits for a detached single-family dwelling located on one parcel).

The issuance of all "Major Project" grading permits is subject to CEQA review by the Planning Division.

"Minor Project" permits shall be required for any grading not requiring a "Major Project" permit. "Minor Project" permits will be subject to CEQA review if defined as a "project" pursuant to CEQA Guidelines Section 15378.

e. Grading standards are standards for grading, as adopted and amended from time to time by resolution of the Board of Supervisors.

f. Watercourse means any well-defined channel with distinguish-able bed and bank showing evidence of having contained flowing water indicated by deposit of rock, sand, gravel or soil, including but not limited to, streams as defined in Public Resources Code Section 4528(f). "Watercourse" also includes man-made watercourses.

3. Enforcing Officer Designated

In addition to any other enforcing officer designated by the Board of Supervisors, Director of the Department of Resource Management and/or the Director of the Department of Public Works is the enforcing officer with respect to work or projects under the specific administrative control of their department. The Department of Public Works and other County departments shall provide technical assistance to any enforcing officer.

4. Grading Restrictions

No grading shall be done or caused to be done without a grading permit. A grading permit may allow for preliminary grading as part of a valid and effective building permit, subdivision construction plan, or other development or land use entitlement. Preliminary grading permitted for a subdivision project shall limit the work thereunder to that necessary for septic testing, water well drilling, environmental assessments, or surveying; preliminary grading plans for other projects shall contain all of the information required by Section 12.12.070. The grading permit associated with any building permit, subdivision construction plan, or other development or land use entitlement shall comply with the provisions of this chapter.

5. General Exemptions

The following activities are exempt from the permit requirements of this chapter:

a. Cultivation and production of agricultural products, including but not limited to gardening, forestry regulated by the California Department of Forestry and Fire Protection under an approved Timber Harvest Plan, and the rearing and management of livestock, except as provided in subsection B of this section;

b. Brush clearing in accordance with the provisions of Public Resources Code Section 4291 et seq. or at the direction of the Fire Warden for fire prevention and safety purposes.

c. Mining, quarrying, excavating, processing, or stockpiling of rock, sand, gravel, aggregate or clay, as authorized in the Zone Plan for which a use permit and reclamation plan have been granted, except as provided in subsection B of this section;

d. Operation of refuse disposal sites for which a valid permit has been issued pursuant to Chapter 8.32;

e. Temporary excavation for installation or abandonment of underground storage tanks and associated piping when no permanent change is made in the existing terrain and the excavation is refilled;

f. Temporary trench or pit excavation for the purpose of installing underground or overhead utilities, except as provided in subsection B of this section;

g. Subsurface geologic exploration under the supervision of a licensed civil engineer, registered environmental health specialist, engineering geologist or archeologist, except as provided in subsection B of this section;

h. The construction of pits for the containment of drilling fluids, when well drilling is performed pursuant to Chapter 8.56;

i. Grading conducted during a civil or hazardous material emergency or natural disaster to relieve or correct conditions caused by such emergency or disaster or to make emergency firebreaks;

j. The removal and spreading of contaminated earth materials from underground tank excavations performed in compliance with Chapter 8.24; and

k. Grading performed on public works projects by a governmental agency.

No exemption provided in subdivisions 1, 3, 6, or 7, of subsection A of this section shall apply to any grading that will adversely affect any off-site drainage or aquatic habitat, or that will adversely affect the lateral or subjacent support

of any property not owned by the owner of the land upon which such grading is performed.

B. PERMITS

1. Contents of Permit

a. The permit shall include an approved grading plan provided by the applicant and shall set forth terms and conditions of grading operations that conform to the County's grading standards. The permit's terms and conditions may incorporate or comply with the standards of other interested public agencies.

b. The permit shall require the applicant to provide a permanent erosion plan to be implemented upon completion of the project, which plan shall be approved prior to the commencement of any work. For any project which disturbs more than five acres, or where the Director of the Department of Resource Management or the Director of the Department of Public Works determines that a project may adversely impact a watercourse, the plan shall be prepared by a registered civil engineer experienced in erosion control, a certified professional soil erosion and sediment control specialist, or a soil scientist certified by the American Registry of Certified Professionals in Agronomy, Crops and Soils.

c. If work on the project will not be completed by October 15, and the permit does not allow work to continue during the period October 15 through May 1 (the "wet weather season"), a plan for closing the project during the wet weather season shall be required as a condition of permit issuance. The closure plan shall be prepared and certified by a professional listed in subsection B, above.

d. If the permit allows work to be done during the wet weather season, the permit shall contain a condition requiring a wet weather operating and erosion control plan, which plan shall be approved prior to the commencement of any work. The wet weather plan shall be prepared and certified by a professional listed in subsection B, above. That plan shall include all necessary temporary and permanent erosion control measures, including those to be followed should the work stop at any time during the wet weather season. The permit shall contain a timetable for installation of the erosion control measures.

e. Each permit shall require approval of a plan for on-going maintenance of erosion control measures during the duration of the project and for three years after completion of the project, unless the project is released earlier by the enforcing officer. The plan shall name the person responsible for such maintenance. The maintenance plan shall be approved prior to the commencement of any work.

f. The Director of the Department of Resource Management or the Planning Commission or the Board of Supervisors where such body is the issuing body, may refuse to allow any grading on a project during the wet weather season, as a condition of permit issuance.

g. The permit may require the posting of security in an amount sufficient to cover all corrective action or site restoration work and/or the cost of permanent erosion control measures for a period of up to three years from the date of completion of the permanent erosion control measures.

h. The permit shall specify who, in addition to the owner, shall be responsible for installing and maintaining erosion control measures.

2. Permit Issuance and Fee

a. Grading permits shall be issued by the Director of the Department of Resource Management.

b. The Director of the Department of Resource Management shall charge a fee established by resolution of the Board of Supervisors for issuance of the grading permit.

C. ENFORCEMENT

1. Stop Orders

a. Whenever the enforcing officer determines that any grading is occurring or has occurred in violation of the provisions of this chapter, without a grading permit, in violation of the terms and conditions for the permit, or in violation of the grading standards or other applicable law, or without compliance with the conditions of any other applicable permit or governmental approval to perform the work, the enforcing officer shall issue a stop order directing that the violation cease immediately. The order shall state the nature of the violation and that it is deemed to be a nuisance and shall contain references to applicable provisions of law, the grading standards or conditions of approval upon which the enforcing officer based his determination. The order shall include a statement of any corrective action or restoration work the enforcing officer deems necessary to abate the condition.

b. The order shall direct that the condition constituting the violation be abated within ten days after the order is posted and shall state that in the event the owner fails to abate the condition, the condition may be abated at the owner's cost as provided in this chapter. If the enforcing officer determines that the work has proceeded without a required permit or other necessary entitlement from the County, the order shall so state and shall direct that application for the permit or entitlement be made.

c. The order shall be prominently posted at the site of the work and shall be addressed and mailed to the owner of the site, as determined by the latest assessment roll, and any engineer, contractor or equipment operator known to the enforcing officer to have caused or be responsible for causing the work to be done.

d. If the enforcing officer determines that the work is being performed under the authorization of or pursuant to approval by a public agency other than the County and which has jurisdiction to regulate the work, the enforcing officer shall refer the matter to that agency.

e. If no permit or other entitlement is required to perform the work necessary to abate the condition and the condition is abated within the ten-day period, the enforcing officer shall cause the order to be removed from the site and shall mail notice that the order has been removed to the persons to whom the stop order was mailed.

2. Unlawful Acts

a. No person shall do, cause or permit to be done any work in violation of any regulatory or prohibitory provision of this chapter, or any grading permit, or the grading standards, or any stop order issued under this chapter.

b. No person shall abandon any work in violation of any regulatory or prohibitory provision of this chapter, the grading standards, or any stop order issued pursuant to this chapter.

3. Other Penalties

In addition to any other penalties provided by law, one or more of the following penalties may be imposed upon the owner or developer upon a finding by the enforcing officer, Planning Commission, or Board of Supervisors, as specified, that the owner or developer has violated a provision of this chapter.

The enforcing officer may order that no further work be done on the project until:

a. A grading permit is obtained or modified, which permit or modified permit shall include a corrective action or site restoration plan which addresses mitigation of off-site erosion hazards and prevents off-site damage, and

b. The work required by the plan is completed to the satisfaction of the enforcing officer.

If the owner or developer violates this chapter by grading without a permit (sometimes known as "pre-grading'), the official or body subsequently issuing a building permit, subdivision construction plan or a preliminary grading permit shall require that the usual permit fee be doubled.

If the owner or developer violates this chapter by grading without a permit ("pre-grading") or by failing to comply with the terms or conditions of the permit, the Director of the Department of Resource Management, the Director of the Department of Public Works, the Planning Commission or Board of Supervisors may issue an order prohibiting further work on the project until the

owner or developer provides a bond, or other acceptable performance security, in a sum sufficient to cover all corrective or site restoration work and the cost of all permanent erosion control measures.

The Director of the Department of Resource Management, the Director of the Department of Public Works, the Planning Commission or Board of Supervisors may order that further development, other than erosion control and corrective action or site restoration measures, be suspended for up to two years from the date of satisfactory completion of all corrective action or site restoration work.

D. GRADING STANDARDS

1. Purpose and Limitations

The purpose of these standards is to safeguard life, limb, property and the public welfare by regulating grading on private property.

2. Definitions

Unless the context in which a word is used requires a different meaning, the following terms have the meanings indicated.

a. Definitions are as follows:

(1) Approval: a written engineering or geological opinion concerning the progress and completion of the work.

(2) As Graded: the surface conditions extent on completion of grading.

(3) Bedrock: in-place solid rock.

(4) Bench: a relatively level step excavated into earth material on which fill is to be placed.

(5) Borrow: earth material acquired from an off-site location for use in grading on a site.

(6) Civil Engineer: a professional engineer registered in the state to practice in the field of civil works.

(7) Civil Engineering: the application of the knowledge of the forces of nature, principles of mechanics and the properties of the materials to the evaluation, design and construction of civil works for the beneficial uses of mankind.

(8) Compaction: densification of a fill by mechanical means.

(9) Earth Material: any soil, sand, gravel, decomposed granite, or other natural material or fill or any combination thereof.

(10) Engineered Grading: grading in excess of 5,000 cubic yards or in variance with the Grading Standards.

(11) Engineering Geologist: a geologist experienced and knowledgeable in engineering geology.

(12) Engineering Geology: the application of geologic knowledge and principles in the investigation and evaluation of naturally occurring rock and soil for use in the design of civil works.

(13) Engineering Geology Report: a report prepared by an engineering geologist that includes an adequate description of the geology of the site, conclusions and recommendations regarding the effect of geological conditions on the proposed development, and opinions and recommendations covering the adequacy of sites to be developed by the proposed grading.

(14) Erosion: the wearing away of the ground surface as a result of the movement of wind, water, ice or a combination thereof.

(15) Excavation: the mechanical removal of earth material.

(16) Fill: a deposit of earth material placed by artificial means.

(17) Grade: the vertical location of the ground surface.

(18) Existing Grade: the grade prior to grading.

(19) Rough Grade: the stage at which the grade approximately conforms to the plan.

(20) Finish Grade: the final grade of the site which conforms to the plan.

(21) Grading: any excavating or filling or combination thereof.

(22) Key: a designed compacted fill placed in a trench excavated in earth material beneath the toe of a proposed fill slope.

(23) Site: any lot or parcel of land or contiguous combination thereof, under the same ownership, where grading is performed or permitted.

(24) Slope: an inclined ground surface, the inclination of which is expressed as a ratio of horizontal distance to vertical distance.

(25) Soil: naturally occurring surficial deposits overlying bedrock.

(26) Soil Engineer: a civil engineer experienced and knowledgeable in the practice of soil engineering.

(27) Soil Engineering: the application of the principles of soil mechanics in the investigation, evaluation and design of civil works involving the use of earth materials and the inspection and testing of the construction thereof.

(28) Soil Engineering Report: a report prepared by a soil engineer that includes data regarding the nature, distribution and strength of existing soils, conclusions and recommendations for grading procedures and design criteria for corrective measures when necessary, and opinions and recommendations covering adequacy of sites to be developed by the proposed grading.

(29) Terrace: a relatively level step constructed in the face of a graded slope surface for drainage and maintenance purposes.

(30) Vertical Height: the vertical distance between the toe of a slope and a line level with the top of that slope.

3. Cuts

a. General. Unless otherwise recommended in a soil engineering and/or engineering geology report, cuts shall conform to the provisions of this subsection.

b. Slope. The slope of cut surfaces shall be no steeper than is safe for the intended use. Cut slopes shall be no steeper than two horizontal to one vertical.

c. Drainage and Terracing. Drainage and terracing shall be provided as required by Subsection 6.

4. Fills

a. General. Unless otherwise recommended in an approved soil engineering report, fills shall conform to the provisions of this subsection.

b. Fill Location. Fill slopes shall not be constructed on natural slopes steeper than two to one.

c. Preparation of Ground. The ground surface shall be prepared to receive fill by removing vegetation, noncomplying fill, top-soil and other unsuitable materials and scarifying to provide a bond with the new fill, and where slopes are steeper than five to one, and the height is greater than 5 feet, by benching into sound bedrock or other competent material. The bench under the toe of a fill on a

slope steeper than five to one shall be at least 10 feet wide. The area beyond the toe of fill shall be sloped for sheet overflow or a paved drain shall be provided. Where fill is to be placed over a cut, the bench under the toe of fill shall be at least 10 feet wide but the cut must be made before placing fill.

d. Compaction. All fills shall be compacted to a minimum of 90 percent of maximum density as determined by U.B.C. Standard No. 70-1. Field density shall be determined in accordance with U.B.C. Standard No. 70-2 or equivalent.

e. Slope. The slope of fill surfaces shall be no steeper than is safe for the intended use. Fill slopes shall be no steeper than two horizontal to one vertical.

f. Drainage and Terracing. Drainage and terracing shall be provided and the area above fill slopes and the surfaces of terraces shall be graded and paved as required by subsection 6.

5. Setbacks

a. General. The setbacks and other restrictions are minimum and may be increased by the recommendation of a civil engineer, soils engineer or engineering geologist, if necessary for safety and stability or to prevent damage of adjacent properties from deposition or erosion or to provide access for slope maintenance and drainage. Retaining walls may be used to reduce the required setbacks.

b. Setbacks from Property Lines. The tops of cuts and toes of fill slopes shall be set back from the outer boundaries of the property line, including slope right areas and easements, in accordance with Figure and Table 1.

c. Design Standards for Setbacks. Setbacks between graded areas (cut or fill) and structures shall be provided in accordance with Figure 2 and Table 1.

6. Drainage and Terracing

a. General. Unless otherwise indicated on a grading plan prepared pursuant to Subsection 8, drainage facilities and terracing shall conform to the provision of this subsection.

b. Terrace. Terraces at least 6 feet in width shall be established at not more than 30-foot vertical intervals on all cut or fill slopes to control surface drainage and debris except that where only one terrace is required, it shall be at mid-height. For cut or fill slopes greater than 60 feet and up to 120 feet in vertical height one terrace at approximately mid-height shall be 12 feet in width. Terrace widths and spacing for cut and fill slopes greater than 120 feet in height shall be designed by a civil engineer. Suitable access shall be provided to permit proper cleaning and maintenance.

Swales or ditches on terraces shall have a minimum gradient of 5 percent and must be paved with reinforced concrete not less than 3 inches in thickness or an approved equal paving. They shall have a minimum depth at the deepest point of 1 foot and a minimum paved width of 5 feet.

A single run of swale or ditch shall not collect runoff from a tributary area exceeding 13,500 square feet (projected) without discharging into a downdrain.

c. Subsurface Drainage. Cut and fill slopes shall be provided with subsurface drainage as necessary for stability.

d. Disposal. All drainage facilities shall be designed to carry waters to the nearest practicable drainage way or other appropriate jurisdiction as a safe place to deposit such waters. Erosion of ground in the area of discharge shall be prevented by installation of nonerosive downdrains or other devices.

Building pads shall have a drainage gradient of two percent toward approved drainage facilities, provided that the gradient from the building pad may be one percent if all of the following conditions exist throughout the permit area:

1) no proposed fills are greater than 10 feet in maximum depth, and

2) no proposed finish cut or fill slope faces have a vertical height in excess of 10 feet, and

3) no existing slope faces, which have a slope face steeper than 10 horizontally to 1 vertically, have a vertical height in excess of 10 feet.

e. Interceptor Drains. Paved interceptor drains shall be installed along the top of all cut slopes where the tributary drainage area above slopes towards the cut and has a drainage path greater than 40 feet measured horizontally. Interceptor drains shall be paved with a minimum of 3 inches of concrete or gunite and reinforced. They shall have a minimum depth of 12 inches and a minimum paved width of 30 inches measured horizontally across the drain.

7. Erosion Control

When construction activities propose to disturb areas of existing vegetation and ground cover by grading, effective erosion and sediment control measures shall be employed.

a. Erosion Control Plan. Whenever a grading permit requires an erosion control plan, it shall be submitted with the grading plan as per stipulations in the grading permit.

For any project which disturbs more than five acres, or where the Director of the Department of Resource Management determines that a project may

adversely impact a watercourse, the plan shall be prepared by a registered civil engineer experienced in erosion control, a certified professional soil erosion and sediment control specialist, or a soil scientist certified by the American Registry of Certified Professionals in Agronomy Crops and Soils.

The permit shall require the applicant to provide a permanent erosion control plan, which shall be approved prior to the commencement of any work, and shall be implemented upon completion of the project.

If work will not be completed by October 15, and the permit does not allow work to continue during the wet weather season (October 15 through May 1), then a closure or interim erosion plan shall be required as a condition of the permit.

If the permit allows work to be done during the wet weather season, the permit shall require a wet weather operating and erosion control plan. This plan must be approved prior to the commencement of any work and include all necessary temporary and permanent erosion control measures, including those to be followed should the work stop at any time during the wet weather season.

If the site or portion of the site is planned to be idle for more than 45 days, then vegetative stabilization must be accomplished within seven days. The wet weather plan shall include a plan for the immediate (within 24 hours of the first forecast of a storm front) installation of emergency erosion control measures.

b. Design Standards. Practices, standards, and specifications for preparing permanent, closure, and wet weather erosion control plans presented in the manual entitled "County of Shasta, Erosion and Sediment Control Standards - Design Manual" prepared by John McCullah, shall be adhered to.

8. Grading Plan and Inspection

All engineered grading requires a grading plan prepared prior to commencement of work by a civil engineer or with the assistance of the Soil Conservation Service of the United States Department of Agriculture.

The civil engineer who prepares a grading plan shall incorporate all recommendations from the soil engineering report and any engineering geology report into the grading plan. He shall also be responsible for the professional inspection and approval of the grading within his area of technical specialty. This responsibility shall include, at a minimum, grade and drainage of the development area.

A soil engineering report shall be prepared for each grading plan prepared by a civil engineer.

The soil engineer's area of responsibility shall include, at a minimum, the professional inspection and approval concerning the preparation of ground to receive fills, testing

for required compaction, stability of all finish slopes and the design of buttress fills, where required, incorporating any data supplied by an engineering geologist.

If an engineering geologist is retained for the work, his area of responsibility shall include, at a minimum, professional inspection and approval of the adequacy of natural ground for receiving fills and the stability of cut slopes with respect to geological matters, and the need for subdrains or other ground water drainage devices. He shall report his findings to the soil engineer and the civil engineer for engineering analysis. If an engineering geologist is not retained, the civil engineer who prepares the grading plan shall assume the responsibilities of the engineering geologist.

9. Archeological Sites

If in the course of development, any archeological or cultural remains are encountered, work shall cease and a qualified archeologist contacted immediately.

REQUIRED SETBACKS (FEET)

H	SETBACKS a	b
UNDER 5	0	1
5 TO 30	H/2	H/5
OVER 30	15	6

TABLE 1

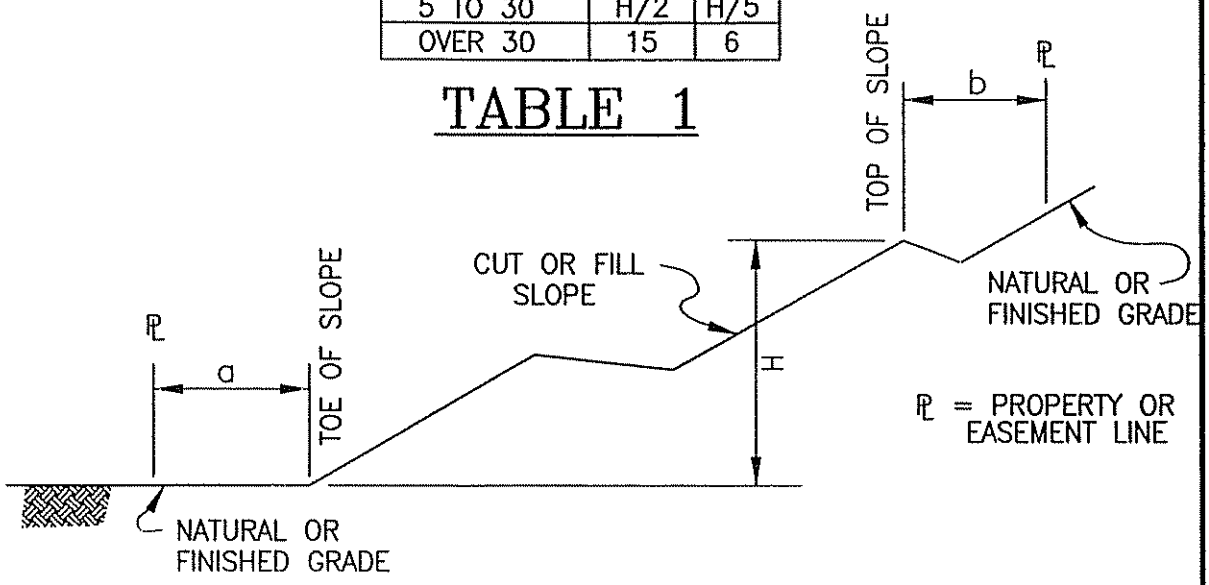

FIGURE 1

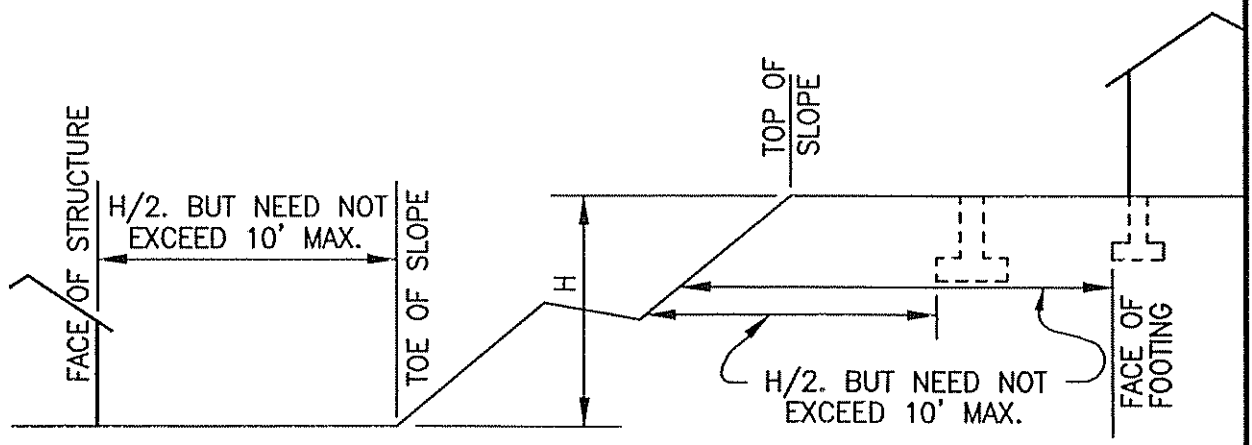

FIGURE 2

SCALE: NTS	DATE: 1996	SHASTA COUNTY DEPARTMENT OF PUBLIC WORKS	
		APPROVED BY: William E. Lyman WILLIAM E. LYMAN	SLOPE SETBACKS
MARK	DATE	REVISION	

CHAPTER 5

SEWAGE

DISPOSAL

STANDARDS

SHASTA COUNTY SEWAGE DISPOSAL STANDARDS*

In addition to the provisions of the Shasta County Ordinance Code regulating sewage disposal, the following regulations and standards apply to all individual sewage disposal, sewage disposal systems, and sewage disposal operations over which the Shasta County Director of Environmental Health has jurisdiction. References below to the Director of Environmental Health include his designees.

A. LAND DIVISIONS NOT SERVED BY COMMUNITY SEWERAGE

1. Disposal Area.

   a. Each parcel shall contain one or more disposal areas, each consisting of minimum 1/2 acre of usable disposal material in locations which could reasonably be utilized by a structure built at a desirable and feasible site.

   b. Disposal area shall not include:

      (1) Land subject to flooding. In case of disputes concerning flooding potential, the flooded area shall be determined by calculating the expected 10-year frequency flood.

      (2) Land closer than 200 feet to a lake or reservoir, measured from the high water line or 100 feet if down slope from the lake or reservoir.

      (3) Land closer than 200 feet to any spring, or 100 feet if downhill from the spring.

      (4) Land within 100 feet of any existing or proposed well site for the parcel or any adjoining parcels.

      (5) Land closer than 100 feet to an intermittent, seasonal, or perennial waterway measured from the top of the bank or other physically evident high water line. An intermittent stream is one which may continue to flow for five or more days after the passage of a storm.

      (6) Land closer than 50 feet to an ephemeral stream, measured from the edge of the channel. An ephemeral stream is one which flows for less than five days after the passage of a storm.

*As amended through November 20, 2001. This section supplements provisions of the Shasta County Ordinance Code.

It contains no water from a spring, snow, or other long-continuing surface source and does not discharge to a perennial aquifer.

(7) Land closer than 50 feet downhill from an irrigation ditch or canal.

(8) Land closer than 50 feet uphill from an existing or proposed cut.

(9) Land with a grade steeper than 30 percent.

(10) Filled land, unless the fill is engineered for sewage disposal and approved by the Shasta County Director of Environmental Health.

(11) Dredger tailings.

(12) Gravel bars of very pervious materials adjoining a stream or body of water.

(13) Land used for road or utility easements. Overhead utility easements may be included if the utility, entity or agency holding the easement gives a permanent and unconditional release, easement or license for sewage disposal within the easement.

2. Disposal Material Characteristics.

Usable disposal material has both of the following characteristics:

a. Percolation rates greater than 5 and less than 60 minutes per inch when tests are conducted by the method specified in the Manual of Septic Tank Practice, U.S. Department of Health and Human Services.

b. Depth to a seasonal high water table, as determined by the procedures in A3c, shall be at least four feet for lots of one or more acres and at least eight feet for lots of less than one acre or community disposal field.[1]

[1] "Community disposal fields" are fields that serve more than two (2) individual dwelling units.

3. Percolation Test, Test Pits and Groundwater Monitoring.

a. Percolation Tests.

Three percolation tests representative of the disposal area shall be conducted on each proposed disposal area at a depth of three feet by the method in the Manual of Septic Tank Practice. As a substitute for one-half of the percolation tests for the entire subdivision, the procedures in the document referred to in A5b(2) may be used.

b. Test Pits.

At least one test pit shall be excavated on each lot. It shall be at least two (2) feet wide and five (5) feet deep for an acre or greater and nine (9) feet deep for lots less than one (1) acre or community disposal fields. It shall slope towards one end at a rate no greater than 3:1. The soil profile shall be logged by a person qualified to perform percolation tests[1] and backfilled. At the request of the Shasta County Director of Environmental Health, pits will be provided for examination by the Department.

c. Groundwater Monitoring.

(1) The height of the seasonal high groundwater shall be determined by wet weather testing when any of the following is present:

(a) Vegetation tolerant of, or indicative of, a high water table present on or in the vicinity of the parcel.

(b) High groundwater has previously been found in the vicinity.

(c) The test pits show cracked or creviced formations but no clear delineation of the top of the water table.

(d) Other conditions or historical data preclude accurate determination of the groundwater levels by dry weather observations.

[1] See paragraph A3d below

(e) The test pits indicate less than five feet of disposal material over an impervious stratum or eight (8) feet for lots less than an acre or community disposal fields.

(f) Free water from seepage is observed in the test pit.

(2) The height of seasonal high groundwater shall be determined by actual measurements of observation wells during periods of maximum soil moisture content, or by mathematical modeling after sufficient precipitation has occurred to meet or exceed field capacity of the soil, and produce a response in observation wells acceptable to the Shasta County Director of Environmental Health.

(a) Direct Observation:

The design for constructing an observation well is shown in Figure 1.

Measurements shall be taken at the times and intervals specified by the Shasta County Director of Environmental Health in response to local conditions. Except as the Shasta County Director of Environmental Health may otherwise direct, measurements (excluding land within the A.C.I.D.) shall be taken at approximately monthly intervals from January 1 to April 30. Land requiring groundwater monitoring caused by A.C.I.D. irrigation water and within the A.C.I.D. shall have monthly measurements beginning May 1 and ending August 31.

At least one observation well shall be included within each proposed disposal area suspected of having groundwater less than four feet, or eight feet for lots of less than one acre, below the ground surface, except where a nearby monitoring well shows groundwater contours representative of the proposed disposal area.

For a site to be acceptable for a conventional disposal system (without mathematical modeling), the groundwater during the monitoring period shall not be less than four feet below the ground surface, or eight feet for lots of less than one acre or community disposal fields. <u>If these limits are exceeded on any observation, weekly observations shall be recorded throughout the remainder of the wet weather season to assure that the standards are not exceeded for longer than any two-week period. The depth to groundwater shall never be less than two feet (four feet for lots less than one acre or community disposal fields) on any observation.</u> If seasonal rainfall up to the April 30 cutoff date has not exceeded

80 percent of the normal rainfall, as determined by the nearest rainfall reporting station approved by the Shasta County Director of Environmental Health, during the period from December 1 to April 30, testing shall be continued the next year or the site may be evaluated by mathematical modeling or "Conditions Associated with Saturation."

(b) Mathematical Modeling.

This approval is to be based on the results of calculations that demonstrate that the site meets the conditions required in the preceding paragraph. Calculations shall be provided by a qualified professional knowledgeable in groundwater hydrology and be based on using a 10-year rainfall return interval for the most critical situations.

1. Monitoring Wells for Mathematical Modeling

Monitoring wells necessary to complete mathematical modeling require special design and observation. A copy of Shasta County Bulletin #1 "Guidelines for Monitoring Well Construction and Observation for Mathematical Modeling" should be consulted prior to proceeding.

d. All of the above testing shall be done by, or under the supervision of, a qualified registered civil engineer, registered geologist, registered environmental health specialist, certified engineering geologist, or soil scientist certified by the American Registry of Certified Professionals in Agronomy, Crops and Soils, or by a qualified testing laboratory approved by the Office of the State Architect.

The results of all percolation tests and groundwater monitoring shall be reported and the logs of all excavations shall be submitted to the Shasta County Director of Environmental Health and shall be accompanied by a plot plan to scale showing the test, well and pit locations. The map shall include the topography in the 1/2 acre disposal area at five (5) foot contour intervals. The Shasta County Director of Environmental Health may disregard any test or log that, in his opinion, does not represent the soil conditions of the parcel.

4. Soil Analysis*

"Conditions Associated With Saturation".

As an alternative to direct observation or mathematical modeling, an application may be made to the Director of

Environmental Health for individual evaluations utilizing "Conditions Associated With Saturation".

(a) Conditions Associated With Saturation include:

1) Reddish brown or brown soil horizons with gray (chromas of three or less) and/or red or yellowish red mottles; or

2) Gray soil horizons, or gray soil horizons with red, yellowish red, or brown mottles; or

3) Dark-colored highly organic soil horizons; or

4) Soil profiles with concentrations of soluble salts at or near the ground surface.

(b) If conditions associated with saturation do no occur in "soil with rapid or very rapid permeability", saprolite or fractured bedrock, soils predictions of the highest level of the water table shall be based on direct observations or mathematical modeling as defined in A3C(2)(a) & (b).

(c) "Soil with Rapid or Very Rapid Permeability" means"

1) Soil which contains thirty-five (35) percent or more of coarse fragments two (2) millimeters in diameter or larger by volume with intersticial soil of sandy loam texture or coarser, as defined in Appendix A and Soil Textural Classification Chart, Table One; or

2) Coarse textured soil (loamy sand or sand as defined in Appendix A and as classified in Soil Textural Classification Chart, Table One); or

3) Stone, cobbles, gravel and rock fragments with too little soil material to fill interstices larger than one (1) millimeter in diameter.

(d) Saprolite means weathered material underlying the soil that grades from soft thoroughly decomposed rock to rock that has been weathered sufficiently so that it can be broken in the hands or cut with a knife. It does not include hard bedrock or hard fractured rock. It has rock structure instead of soil structure.

* Site evaluation procedures for determination of groundwater using"Conditions Associated with Saturation."

Applications for site evaluation shall be made to the Director

of Environmental Health on forms approved by the Department. Each application must be completed in full, signed by the owner or his legally authorized representative, and be accompanied by all required exhibits and appropriate fee. Applicants shall provide at least two (2) test pits with dimensions of at least two (2) feet wide and which slope toward one end at a rate no greater than 3:1 and be five (5) feet deep and located approximately seventy-five (75) feet apart and within the 1/2 acre disposal area on each individual parcel or proposed parcel. A new application and fee shall be submitted for each additional set of two test pits per parcel.

For a site to be acceptable under this method for a conventional disposal system, groundwater shall not be less than four feet below ground surface.

Lots less than one (1) acre in size or community disposal fields shall be evaluated using either direct observation as defined in A3c(2)(a) or mathematical modeling as defined in A3c(2)(b).

The Shasta County Director of Environmental Health shall be the sole determiner of groundwater levels based on "Conditions Associated with Saturation." This shall not preclude the applicant from conducting direct observations or mathematical modeling as defined in A3C(2)(a) & (b).

5. Limitations.

a. No lot shall be created for which a seepage pit is the only feasible method of sewage disposal.

b. In subdivisions where no adequate impervious stratum lies beneath the one which may receive effluent and above the usable water aquifer, no lots shall be approved where the depth of usable material beneath any leach line will be less than five feet. An adequate impervious stratum exists if the stratum:

(1) Confines under pressure the usable aquifer so that wells drilled in it have a higher static water level than the level at which the driller first encounters the water, or

(2) Consists of layers of material five feet thick with particle size distribution classified as "Zone 4" in the "Soil Percolation Suitability Chart" of the North Cost Regional Water Quality Control Board document, Soil Evaluation for On-Site Disposal, (prepared by William T. Neikirk, Jr., dated May, 1979) and with bulk density of 1.9 or other materials demonstrated to be equivalent thereto, or

(3) Consists of material with a percolation rate slower than 120 minutes per inch when tested by the Method prescribed in the Manual of Septic Tank Practice, or

(4) Supports a perched water table.

c. When a potential is noted for inadequate treatment in the underlying or disposal material prior to effluent reaching a usable aquifer or the surface, additional tests to prove that travel time is sufficient shall be done, or the project will be recommended for disapproval and sewage disposal permits will not be granted.

6. Waivers.

a. Certified Design Systems.

The Shasta County Director of Environmental Health and the Central Valley Regional Water Quality Control Board may certify the design of special systems for use in mitigating the adverse effects of specific soil or water table deficiencies. These certified systems may be permitted on lots with the specific deficiencies without being designed by a person qualified to conduct percolation tests, and the property shall be committed to participate in the inspection and maintenance program for non-conventional wastewater disposal systems established in the Shasta County Ordinance Code, as amended.

b. Special Non-Conventional Systems.

In specific locations, and under special circumstances, the Shasta County Director of Environmental Health may waive soil, percolation or groundwater criteria set by these Standards and permit the use of a specially designed non-conventional system if technical data demonstrate that the system is unlikely to create a health hazard or impair water quality and on the condition that the property is committed to participate in the inspection and maintenance program. Written notice of the proposed use of such a system shall be mailed by the Shasta County Director of Environmental Health to the Regional Water Quality Control Board. Any such waiver requires the concurrence of that Board, which shall be assumed to concur unless it notifies the Shasta County Director of Environmental Health to the contrary within three weeks after notice is given. The data shall be submitted by and the system shall be designed by and constructed by or under the supervision of a person qualified to conduct percolation tests under paragraph A3d, above.

c. Lots Created for Uses which will not Generate Liquid Wastes.

(1) Lots proposed and suitable for agricultural, commercial, industrial, or recreational uses that will not generate

liquid wastes and do not require the regular presence of workers or employees are not subject to the disposal area or testing requirements of the above portions of this subsection.

(2) Each of these parcels shall be identified on the recorded map with this statement: "This parcel is not approved for any use that will generate liquid wastes. No permit to dispose of sewage or other liquid waste generated by the use of this property will be issued until applicable provisions of state and local law and the Shasta County Sewage Disposal Standards, as amended, have been complied with."

d. Limitation on Waivers.

The requirement of 1/2 acre of disposal area may not be waived for new land divisions.

7. Subdivisions with 100 or More Lots.

All lots in subdivisions with 100 or more lots shall be committed to participate in the county sewage disposal system inspection and maintenance program or be subject to an equivalent program conducted by another acceptable public entity, unless a specific waiver is granted by the Regional Water Quality Control Board.

8. Maps.

a. Tentative.

All tentative maps shall show for each parcel the location, boundaries and calculated acreage of the disposal area(s) as determined by the procedures of A3. The test results shall be submitted concurrently with the tentative land division application. If individual wells are proposed, the map shall show all existing and proposed well sites. The map shall be to scale and show topography in the 1/2 acre disposal area at five (5) feet contour intervals and location of the test pits, percolation tests, and piezometers.

b. Final and Parcel Maps.

For each parcel, the area(s) qualifying as disposal area shall be clearly delineated and labeled on the final or parcel map. If recordation of a parcel map is waived and developable parcels are proposed, a plot plan showing equivalent information shall be attached as an exhibit to, and recorded with, the notice of approval of waiver of parcel map. The face of each map or plot plan shall be annotated: "An onsite sewage disposal system shall be located only within

the disposal area indicated for each parcel unless an alternative site is specifically approved by the Shasta County Director of Environmental Health." If individual wells are proposed, the map shall show all existing and proposed well sites.

B. EXISTING UNITS

1. Developed Lots

a. Repairs/Replacement

If an onsite sewage disposal system has been installed on a lot pursuant to a valid sewage disposal permit, the requirements of Subsection A shall not apply to the lot so long as the leach field or expansion area functions properly. If neither the leach field nor expansion area functions properly, paragraph 2 below applies.

b. Division of lots with existing sewage disposal systems

Lots with septic systems installed pursuant to a valid sewage disposal system permit issued prior to November 20, 2001, may be divided without demonstrating compliance with Subsection A. Lots with septic systems installed pursuant to a valid sewage disposal system permit issued on or after November 20, 2001, must demonstrate compliance with the requirements of Subsection A.

2. Undeveloped Lots

a. For all existing undeveloped lots which were not created under Subsection A of these Standards, Subsection C applies.

b. For lots which could not have been created under subsection A, but which meet the 1976 or the 1980[3] Standards for usable area, as determined by Table 2 or 3, a septic tank and conventional leach field may be approved by the Shasta County Director of Environmental Health for installation in the soil most suitable for sewage disposal.

c. For all undeveloped lots, including those with less than one-half acre of disposal area, a waiver for a special non-conventional or certified design system may be approved under paragraph A6 above. Concurrence of the Regional Water Quality Control Board is not required.

(3) The 1976 Sewage Disposal Standards were adopted by Resolutions No. 76-42 and No. 76-176 and the 1980 Standards were adopted by Resolution No. 80-298.

C. SOILS TESTING.

1. Test Pits, Percolation Tests, and Groundwater Monitoring.

a. All lots shall be tested and approved for onsite sewage disposal systems. Three percolation tests representative of the disposal area shall be conducted at a depth not to exceed three (3) feet by the Manual of Septic Tank Practice, or equivalent method as determined by the Shasta County Director of Environmental Health. At least one test pit shall be excavated in the disposal area. It shall be at least two feet wide and five feet deep for an acre or greater and nine feet deep for lots less than one acre or community disposal fields. It shall slope toward one end at a rate no greater than 3:1. The soil profile shall be logged by a person qualified to perform percolation tests and then backfilled. At the request of the Shasta County Director of Environmental Health, pits will be provided for examination by the Department. If groundwater monitoring is required by the Shasta County Department of Environmental Health, the monitoring shall be done as required under A3c above.

D. Construction and Installation

The following requirements apply to all lots, regardless of when or how created:

1. Onsite Sewage Disposal (General).

a. Where permitted by Section 1101 of the UPC, a building or mobile home sewer may be connected to a sewage disposal system complying with the provisions of these Standards if a sewage disposal permit is first obtained. The type of systems shall be determined on the basis of location, soil porosity and the groundwater level and shall be designed to receive all sanitary sewage from the property. Unless another design or method is approved by the Shasta County Director of Environmental Health, the system shall consist of a septic tank with effluent discharging into a subsurface disposal field. One or more seepage pits or a combination of subsurface disposal field and seepage pits may be approved only under the standards of paragraphs 6, 7, and 8 below.

b. The method of sewage treatment and disposal shall be approved by the Shasta County Director of Environmental Health prior to issuance of a permit in the following cases: where conditions are such that the above system cannot be expected to function satisfactorily; for commercial, agricultural, and industrial plumbing systems; for installations where appreciable amounts of industrial or indigestible waste are produced; for occupancies not listed in Table I-3 of the UPC; for occupancies producing abnormal quantities of sewage or liquid waste; when

grease interceptors are required by the UPC; or for minor, limited or temporary uses.

c. Disposal systems shall be designed to utilize the most porous or absorbent portions of the soil formation. Where the groundwater level extends to within 12 feet or less of the ground surface or where the upper soil is porous and the underlying stratum is rock or impervious soil, a septic tank and disposal field system may be installed but no seepage pit will be permitted in any event.

d. All onsite sewage disposal systems shall be designed so that additional subsurface disposal fields, equivalent to at least 100 percent of the required area of the original system, may be installed if the original system cannot absorb all the sewage. No parcel shall be divided and no structure shall be erected or constructed if to do so would impair the usefulness of the 100 percent expansion area for its intended purpose.

e. No property shall be improved or used in excess of its capacity to properly absorb sewage effluent in the quantities and by the means provided in these Standards.

f. When the Shasta County Director of Environmental Health finds insufficient lot area or improper soil conditions for adequate sewage disposal for the use proposed, no sewage disposal, building or mobile home installation permit shall be issued and no onsite sewage disposal shall be permitted. Where space or soil conditions are critical, no permit shall be issued until engineering data and test reports have been submitted to and approved by the Shasta County Director of Environmental Health. The Shasta County Director of Environmental Health may approve a variance as to the location of any disposal field shown on a map or plot plan approved under subsection A above if he finds that new information and public health and safety require the variance.

2. Area of Disposal Fields and Seepage Pits.

The minimum effective absorption area in disposal fields in square feet of trench bottom, and in seepage pits in square feet of side wall, shall be predicated on anticipated daily sewage flow in gallons, the type of soil found in the excavation made pursuant to B2 and shall be as follows:

a. For disposal fields, a minimum of 150 square feet of trench bottom shall be provided for each system, exclusive of all hardpan, rock, clay and other impervious formations. For large, specially-designed and approved systems, side wall area in excess of the required 12 inches and not to exceed 36 inches below the leach line may be added to the square feet trench bottom area when computing absorption areas.

b. For seepage pits, the required wall area of the pit or pits shall be determined from the results of percolation tests made and interpreted as directed by the Shasta County Director of Environmental Health.

3. Septic Tanks

a. Plans for all septic tanks shall be submitted to the Shasta County Director of Environmental Health for approval and shall show all dimensions, reinforcing, structural calculations and such other pertinent data as may be required. Independent laboratory tests and calibrations shall be provided on prefabricated septic tanks as required by the Shasta County Director of Environmental Health.

b. Septic tanks shall be water-tight and constructed of sound and durable materials that are not subject to excessive corrosion or decay. Wooden septic tanks are prohibited. Each tank shall be structurally designed to withstand all anticipated earth or other loads and shall be installed level and on a solid bed.

c. The walls and floor of each poured-in-place concrete septic tank shall be monolithic. The length of any section of unreinforced concrete wall shall not exceed six feet. No cross section of any unreinforced concrete wall or floor shall be less than five inches in thickness. The minimum compressive strength of any concrete wall, top, cover or floor shall be 2,500 pounds per square inch.

d. Concrete covers shall be reinforced with steel reinforcing bars and poured-in-place covers shall be reinforced with 1/2-inch steel bars on not more than 20-inch centers. All covers shall be capable of supporting an earth load of not less than 300 pounds per square foot when the maximum coverage does not exceed three feet.

e. The minimum wall thickness of any steel septic tank shall be No. 12 U.S. gauge (.109 in.) and each steel tank shall be protected from corrosion both externally and internally by an approved bituminous coating or by other means acceptable to the Shasta County Director of Environmental Health.

f. Septic tank design shall be such as to produce a clarified effluent and shall provide adequate space for sludge and scum accumulations consistent with the proposed use.

g. Septic tanks shall have a minimum of two compartments. The inlet compartment of any septic tank shall be two-thirds of the total capacity of the tank nor less than 500 gallons liquid capacity, and shall be at least three feet in width and five feet in length. Liquid depth shall be not less than two feet and six inches. The secondary compartment of any septic tank shall have a capacity of one-third of the total capacity of the tank.

h. Access to each septic tank shall be provided by at least two manholes 20 inches in minimum dimension or by an equivalent removable cover slab. One manhole shall be located over the inlet and one over the outlet. Whenever a first compartment exceeds 12 feet in length, an additional manhole shall be provided over the baffle wall. Septic tanks installed under concrete paving or blacktop shall have the required manholes accessible by either extending the manhole openings to grade in a manner acceptable to the Shasta County Director of Environmental Health, or by providing a removable concrete or other approved section, not less than 20 inches in the least dimension, in the concrete paving or blacktop and located directly over the required manholes.

i. The inlet and outlet pipe or baffle shall extend four inches above and at least 12 inches below the water surface. The invert of the inlet pipe shall be at a level not less than two inches above the invert of the outlet pipe.

j. Inlet and outlet pipe fittings or baffles and compartment partitions shall have a free vent area equal to the required cross-sectional area of the house sewer or private sewer discharging into the tank to provide free ventilation above the water surface from the disposal field or seepage pit through the septic tank, house sewer and stack to the outer air.

k. The total depth shall exceed the liquid depth by at least nine inches. The cover of the septic tank shall be at least two inches above the vent openings.

l. Partitions or baffles between compartments shall be of sound and durable material and shall extend at least four inches above the liquid level. An inverted fitting equivalent in size to the tank inlet, but in no case less than four inches in size, shall be installed in the inlet compartment side of the baffle with the bottom of the fitting placed midway in the depth of the liquid. Wooden baffles are prohibited.

m. Septic tanks serving dwellings or groups of dwellings shall be designed to contain at least a five-year accumulation of sludge and scum computed on the basis of a 95 percent confidence limit plus the expected daily liquid loading computed by the Director of Environmental Health on the basis of a 95 percent confidence limit. Septic tanks serving structures with other occupancies shall be designed to contain at least three times the expected daily liquid loading. Septic tanks shall be at least twice as long as their width or liquid depth. The horizontal flow-through distance shall be at least eight feet for 750 gallon septic tanks and nine feet for all larger tanks.

4. Disposal Fields.

a. Distribution lines shall be constructed of materials approved by the Shasta County Director of Environmental Health provided that sufficient openings are available for distribution of the effluent into the trench area.

b. Before drain lines are laid, crushed stone, gravel, slag, or similar filter materials clean in appearance and varying in size from three-quarter inch to two and one-half inches and otherwise acceptable to the Shasta County Director of Environmental Health shall be placed in the trench to the depth and grade required by this paragraph: The filter material in the leaching field shall conform to the following standards: Effective size 3/4 inch, uniformity coefficient 3.0, voids 40 percent by volume. The filter material shall have a cleanness value of at least 70 using test method No. Calif. 227-E method of test for evaluating cleanness of course aggregate. The gravel shall be placed in the trenches in a manner which will leave the sides and bottom free from deposits of rock dust or cement dust. "Effective size" for the purpose of these Standards is that size of grain which is larger than 10 percent of the material by weight. The uniformity coefficient for the purpose of these Standards is that sieve that passes 60 percent of the material divided by sieve size that passes 10 percent of the material. Drain lines shall be completely encased by filter material to prevent closure of voids with earth backfill.

c. When seepage pits are used in combination with disposal fields, the filter material in the trenches shall terminate at least five feet from the pit excavation and the line extending from such points to the seepage pit shall have watertight joints and be made of pipe approved by the Shasta County Director of Environmental Health.

d. Where two or more drain lines are installed, an approved distribution box of sufficient size to receive lateral lines shall be constructed at the head of each disposal field. The inverts of the inlet shall be at least one inch above the outlets. Suitable baffles shall be provided to insure equal flow. Distribution boxes shall be installed in natural or compacted soil.

e. All laterals from distribution box to the disposal field where the grade exceeds six inches per 100 feet shall have watertight joints and be made of pipe approved by the Shasta County Director of Environmental Health. Multiple disposal field laterals, wherever practicable, shall be of uniform length and, if possible, interconnected at their downstream ends.

f. Connections between a septic tank and a distribution box, or between a distribution box and a seepage pit or drainfield, or between seepage pits shall be laid with approved watertight joints on natural ground or compacted fill.

g. Automatic siphon or dosing tanks shall be installed when required or as permitted by the Director of Environmental Health.

h. Disposal fields shall be constructed as follows:

Maximum length of each line.	100 feet
Minimum bottom width of trench	18 inches
Minimum spacing of lines (edge to edge). . .	8 feet
Maximum depth of earth cover over lines. . .	36 inches
Maximum grade of lines	4 in/100'
Minimum grade of trench.	Level
Maximum grade of trench.	4 in/100'
Minimum usable material below trench bottom.	12 inches
Minimum filter material under drain lines. .	12 inches
Minimum filter material over drain lines . .	2 inches
Maximum distance drain pipe to edge of trench	18 inches

i. A disposal field shall not be installed in filled ground.

j. The site of the initial and replacement disposal fields shall not be covered by asphalt or concrete or subject to vehicular traffic or other activity which would adversely affect the soil.

k. Straw, newspaper, untreated building paper or similar materials shall be placed over filter materials in leach lines or seepage pits prior to backfilling.

5. Seepage Pits.

No seepage pit may be located in areas where individual wells are the customary source of water supply. Seepage pits are to be used only as a last resort when no other method of disposal is likely to function properly. No seepage pit may be constructed, maintained or used for sewage disposal unless the Shasta County Director of Environmental Health finds in each case that the use of the pit or pits will not cause a health hazard directly or indirectly. No system of seepage pits shall expose less than 600 square feet of surface below flowline for the absorption of sewage. Seepage pits shall be constructed to the following standards:

a. Each seepage pit above any stratum containing water which is used or is usable as a source of domestic supply shall be separated from that stratum by an impervious stratum, as defined under subsection A5b above.

b. As soon as the pit is completed, a perforated pipe at least four inches in diameter shall be extended from the bottom to the level of the forthcoming concrete seal. The pit shall then be filled with filter material conforming to the specifications in paragraph 4 above.

c. Percolation tests shall be conducted to demonstrate the

absorptive capacity of each pit to the satisfaction of the Shasta County Director of Environmental Health.

d. A stratum of earth less pervious than any of the soil above it shall be located at least four feet beneath the surface. At the level of this stratum a slab of concrete shall be poured that is at least four inches thick and is keyed into the stratum for at least six inches.

e. All piping upstream from the concrete slab shall be of approved material and have watertight joints. The construction and capacity of the septic tank shall comply with paragraphs 3 and 4 above.

f. A cleanout for access to the perforated pipe below the concrete slab shall be located directly over the top of each pit.

6. Shasta County Director of Environmental Health Authority.

In individual cases, the Shasta County Director of Environmental Health may set more stringent requirements than these Standards where such higher requirements are essential to maintain a safe and sanitary condition.

7. The system shall not be backfilled or put into use until it has been inspected and approved by the Department. Before the final inspection, it shall be complete and all portions shall be accessible for inspection.

Appendix A

The major textural classifications are defined as follows:

(1) Sand: Individual grains can be seen and felt readily. Squeezed in the hand when dry, this soil will fall apart when the pressure is released. Squeezed when moist, it will form a cast that will hold its shape when the pressure is released, but will crumble when touched.

(2) Sandy loam: Consists largely of sand, but has enough silt and clay present to give it a small amount of stability. Individual sand grains can be readily seen and felt. Squeezed in the hand when dry, this soil will readily fall apart when the pressure is released, but will withstand careful handling without breaking. The stability of the moist cast differentiates this soil from sand.

(3) Loam: Consists of an even mixture of sand and of silt and a small amount of clay. It is easily crumbled when dry and has a slightly gritty yet fairly smooth feel. It is slightly plastic. Squeezed when moist, it forms a cast that will not only hold its shape when the pressure is released, but will withstand careful handling without breaking. The stability of the moist case differentiates this soil from sand.

(4) Silt loam: Consists of a moderate amount of fine grades of sand, a small amount of clay, and a large quantity of silt particles. Lumps in a dry, undistributed state appear quite cloddy, but they can be pulverized readily; the soil then feels soft and floury. When wet, silt loam runs together in puddles. Either dry or moist, casts can be handled freely without breaking. When a ball of moist soil is presse between thumb and finger, it will not press out into a smooth, unbroken ribbon, but will have a broken appearance.

(5) Clay loam: Consists of an even mixture of sand, silt, and clay, which breaks into clods or lumps when dry. When a ball of moist soil is pressed between the thumb and finger, it will form a thin ribbon that will readily break, barely sustaining its own weight. The moist soil is plastic and will form a cast that will withstand considerable handling.

(6) Silty clay loam: Consists of a moderate amount of clay, a large amount of silt, and a small amount of sand. It breaks into moderately hard clods or lumps when dry. When moist, a thin ribbon or one-eighth (1/8) inch wire can be formed between thumb and finger that will sustain its weight and will withstand gentle movement.

(7) Silty clay: Consists of even amounts of silt and clay and very small amounts of sand. It breaks into hard clods or lumps when dry. When moist, a thin ribbon of one-eighth (1/8) inch or less sized wire formed between thumb and finger will withstand considerable movement and deformation.

(8) Clay: Consists of large amounts of clay and moderate to small amounts of sand. It breaks into very hard clods or lumps when dry. When moist, a thin, long ribbon or one-sixteenth (1/16) inch wire can be molded with ease. Fingerprints will show on the soil, and a dull to bright polish is made on the soil by a shovel.

SHASTA COUNTY
DEPT. OF RESOURCE MANAGEMENT
ENVIRONMENTAL HEALTH DIVISION

FIGURE NO. 1

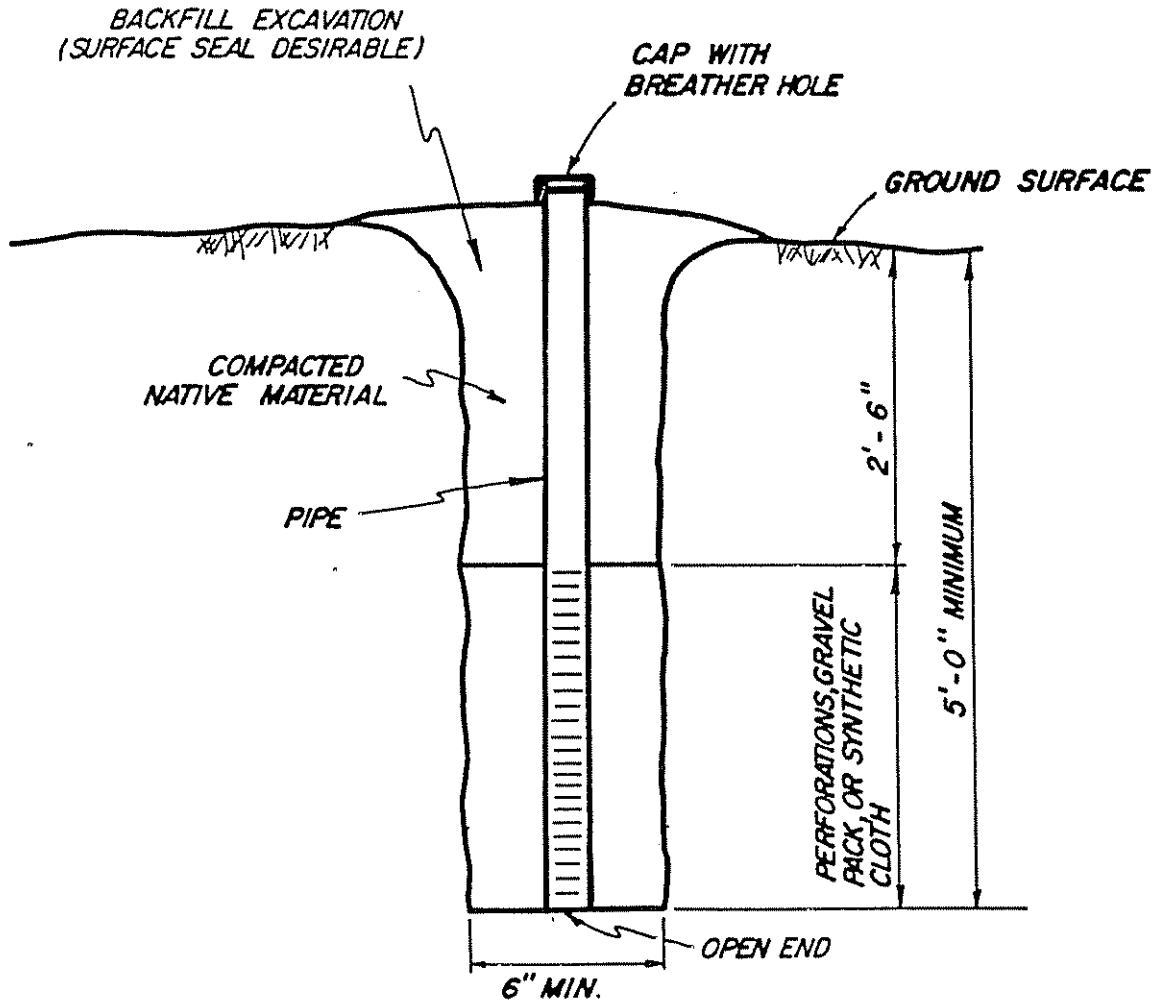

GROUND WATER MONITORING WELL

SHASTA COUNTY BULLETIN #1

GUIDELINES FOR MONITORING WELL CONSTRUCTION AND OBSERVATION FOR MATHEMATICAL MODELING

MONITORING WELLS

A. Observation wells should be drilled to eight (8) feet. This will allow an extra two (2) feet of hole to monitor water levels. Having numerous measurements is critical to the modeling process.

B. Use a drill to make the boring, do not use a backhoe. A backhoe results in a major disturbance to the soil around the bore to the extent the monitoring well is not measuring water levels reflective of the property's soil profile, but of a disturbed hole. Completion with a backhoe will generally result in water levels standing higher in the well than if completed by a drill.

C. Complete the hole during the summer when the soil is dry. Waiting until saturation occurs before drilling the hole can result in smearing of the hole wall which reduces the ability of the hole to drain, causing higher water levels to be recorded than would normally be found.

D. Complete the top three (3) feet of the hole with concrete rather than cuttings removed from the hole. Concrete will provide a seal that keeps surface water from entering the hole. Lack of a proper seal around the top of the hole is the primary source of erratic and unnaturally high water levels in the monitoring wells. The concrete (bagged type is the easiest to work with) can be installed either wet or dry. If installed dry, the concrete will pull moisture from the soil and set adequately; it also won't pass surface water if still in a dry state.

MEASUREMENT PERIOD AND FREQUENCY

A. Measurements should start before the well becomes saturated. It is critical in the modeling process to know how much rainfall occurred prior to saturation.

B Experience has shown that saturation occurs after about 9-12 inches of cumulative rainfall, as measured from about October 1. Tracking the amount of rainfall occurring during the fall will give an idea of when measurements should begin. Once total rainfall reaches nine (9) inches, the wells should be measured at least once every three (3) days until saturation occurs.

C. Once saturation occurs, the well should be measured at least once weekly. This frequency should be adhered to regardless

of where the water stands in the well (the Ordinance calls for weekly measurements if levels reach above four (4) feet). Measurements should continue on a weekly basis until the well goes dry. If any rainfall occurs after the well goes dry, monitoring should be resumed.

MONITORING PROTOCOLS

A. Use a two-wire electrical sounder for making measurements. This device can be made from an inexpensive ohm meter and lamp cord. A commercially-produced sounder will provide the most accurate and more easily read measurements.

B. Make all measurements from the top of the casing to the water level and record this value. Do not make corrections for reference-point height in the field.

C. Record the height of the reference point above ground surface. Use this distance to make corrections to water-level readings at a later time.

D. Record the depth-to-water to the nearest 1/16 inch; always record the readings observed, make no field corrections or additions. If the measuring tape is graduated in inches, record 42 inches, not 3 and 1/2 feet. If graduated in feet by inches, record 3 and 1/2 feet, not 42 inches.

E. Always use the same sounder for making water-level readings, and be consistent in how the measurements are read from the sounder (most sounders have five (5) foot interval "tick marks"). The least error is introduced by always recording up from a tick mark; that is, measurements will always be additive. For example, a measurement from the R.P. to the water level might be recorded as 5'- 1'-2-1/2". It would automatically be known that this represents a five foot tick mark on the sounder plus 1-foot 2-1/2 inches read up from the tick mark to the point on the sounder wire at the R.P.

F. Record if the weather is either dry or raining at the time of measurement.

SHASTA COUNTY
DEPT. OF RESOURCE MANAGEMENT
ENVIRONMENTAL HEALTH DIVISION

Table 1
Soil Textural Classification Chart

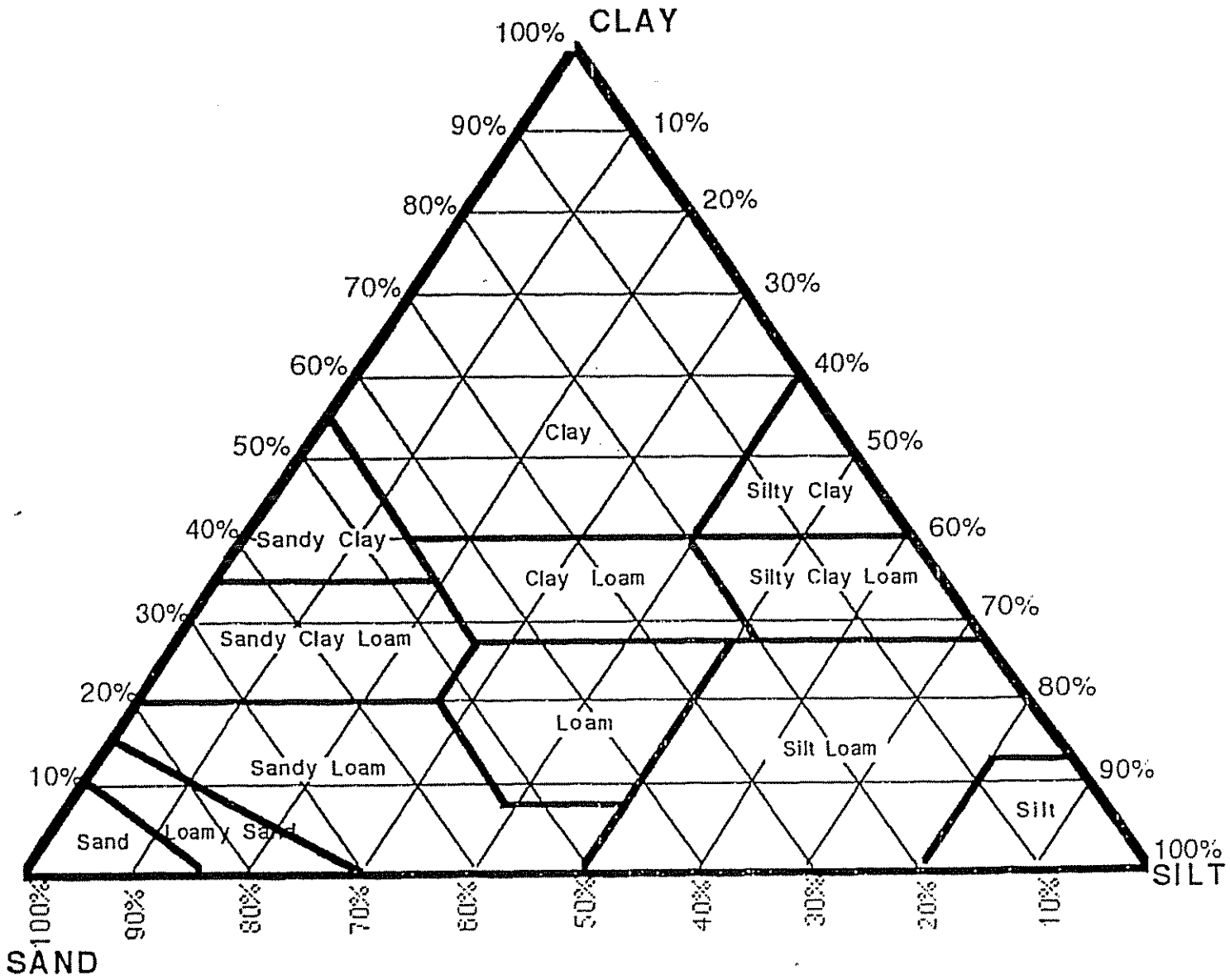

Table 2					
Minimum Horizontal Distance (in feet) Required Between:	**Building Sewer**	**Septic Tank**	**Disposal Field**	**Seepage Pit or Cesspool**	**Well**
Building or Structures[1]	2	10	10	20	Clear
Property Lines	Clear	5	10	10	5
Wells	50[2]	50	100	100	Clear
Domestic Water Line	5[3]	5	5	5	Clear
Springs[4]	50	50	200	200	Above Flood Plain
Ephemeral Streams	50	50	50	50	Above Flood Plain
Intermittent and Perennial Streams[5]	50	50	100	100	Above Flood Plain
Lakes[6]	50	50	200	200	Above Flood Plain
Road Cuts or Excavations			50	50	Clear
Seepage Pits or Cesspools		5	5	16	100
Disposal Field		5	5	5	100
Distribution Box		5		5	100

FOOTNOTES:

1. Includes mobile homes, porches and steps, whether covered or uncovered, breezeways, roofed porte-cocheres, roofed patios, carports, covered walks, covered driveways and other structures or appurtenances.
2. All non-metallic drainage piping shall clear domestic water supply wells at least 50 feet. This distance may be reduced to not less than 25 feet when approved piping is installed. Where special hazards are involved, the distance required shall be increased as the Director of Environmental Health may direct.
3. Water pipes and sewer pipes shall not be located in the same trench. When a water pipe serves a public water system, as defined in PL 93-523, the minimum separation shall be ten feet.
4. These distances apply to sewage disposal systems on the same level as or lower than any spring. Sewage disposal systems shall not be closer than 200 feet at any point in relationship to a spring located on the same hillside or in the same watershed or 100 feet if downhill from the spring.
5. Includes irrigation ditches and natural and artificial drainage ways with either intermittent or continuous flows. This distance is to be measured from the 10-year flood line or top of bank or other evident high-water line or the expected 10-year flood line.
6. Includes lakes, ponds, reservoirs, and other bodies of standing water, s measured from the high-water line or spillway elevation. **For lakes that are uphill from the disposal field, the setback may be reduced to 100 feet.**

TABLE 3

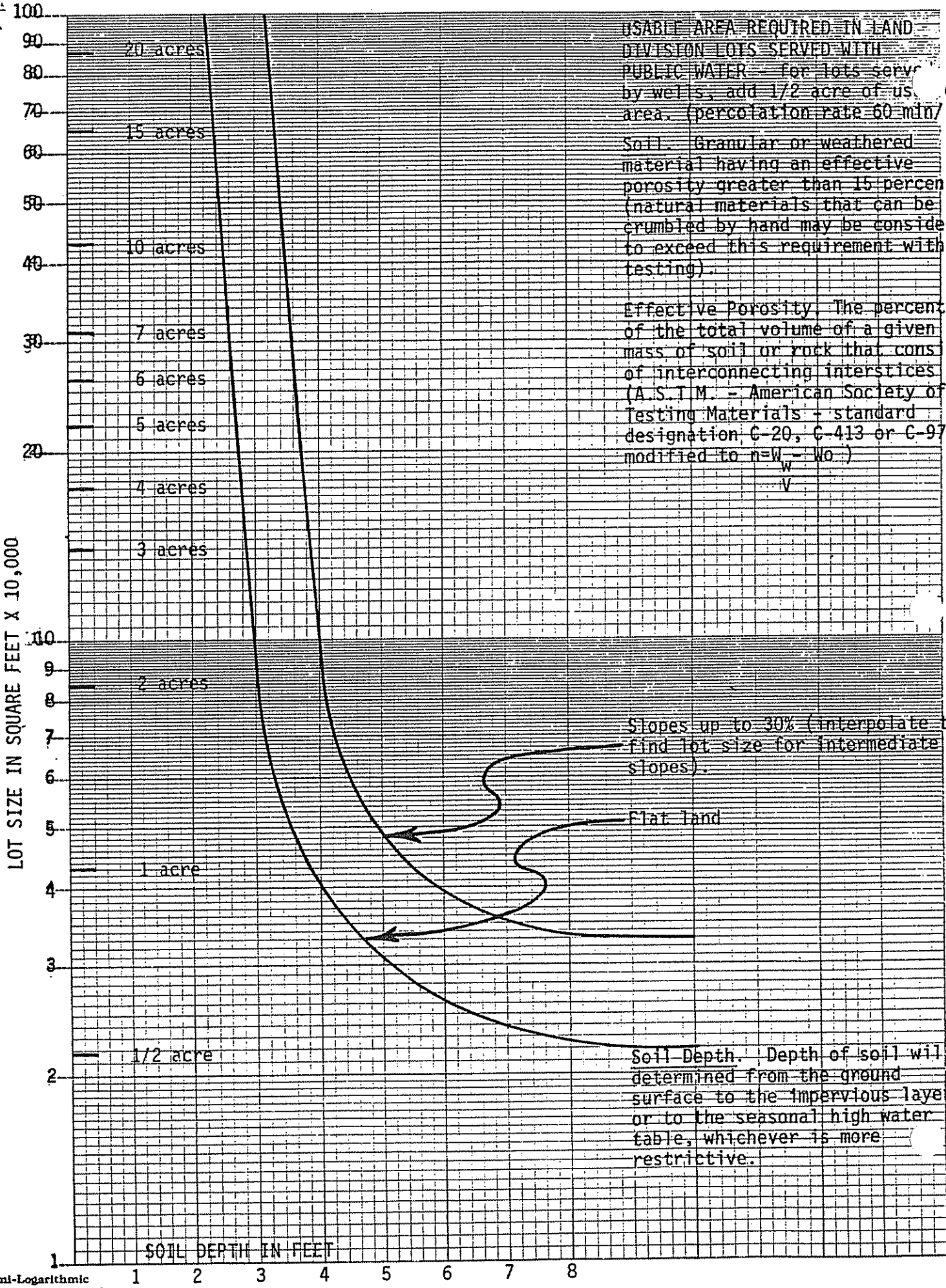

USABLE AREA REQUIRED IN LAND DIVISION LOTS SERVED WITH PUBLIC WATER - For lots serv by wells, add 1/2 acre of us e area. (percolation rate 60 min/ir

Soil. Granular or weathered material having an effective porosity greater than 15 percent (natural materials that can be crumbled by hand may be considere to exceed this requirement withou testing).

Effective Porosity. The percentag of the total volume of a given mass of soil or rock that consis of interconnecting interstices (A.S.T.M. - American Society of Testing Materials - standard designation C-20, C-413 or C-97-4 modified to $n = \frac{W_w - W_o}{V}$)

Slopes up to 30% (interpolate to find lot size for intermediate slopes).

Flat land

Soil Depth. Depth of soil will l determined from the ground surface to the impervious layer or to the seasonal high water table, whichever is more restrictive.

Semi-Logarithmic
2 Cycles x 10 to the inch

SHASTA COUNTY
DEPT. OF RESOURCE MANAGEMENT
ENVIRONMENTAL HEALTH DIVISION

(CERTIFIED SPECIAL DESIGN SYSTEM NO. 1)

DUAL LEACH FIELDS WITH SWITCHING BOX
THIS DESIGN IS TO BE USED TO MITIGATE INADEQUATE SOIL PERMEABILITY-PERCOLATION RATE, 60 MINUTES PER INCH TO 120 MINUTES PER INCH

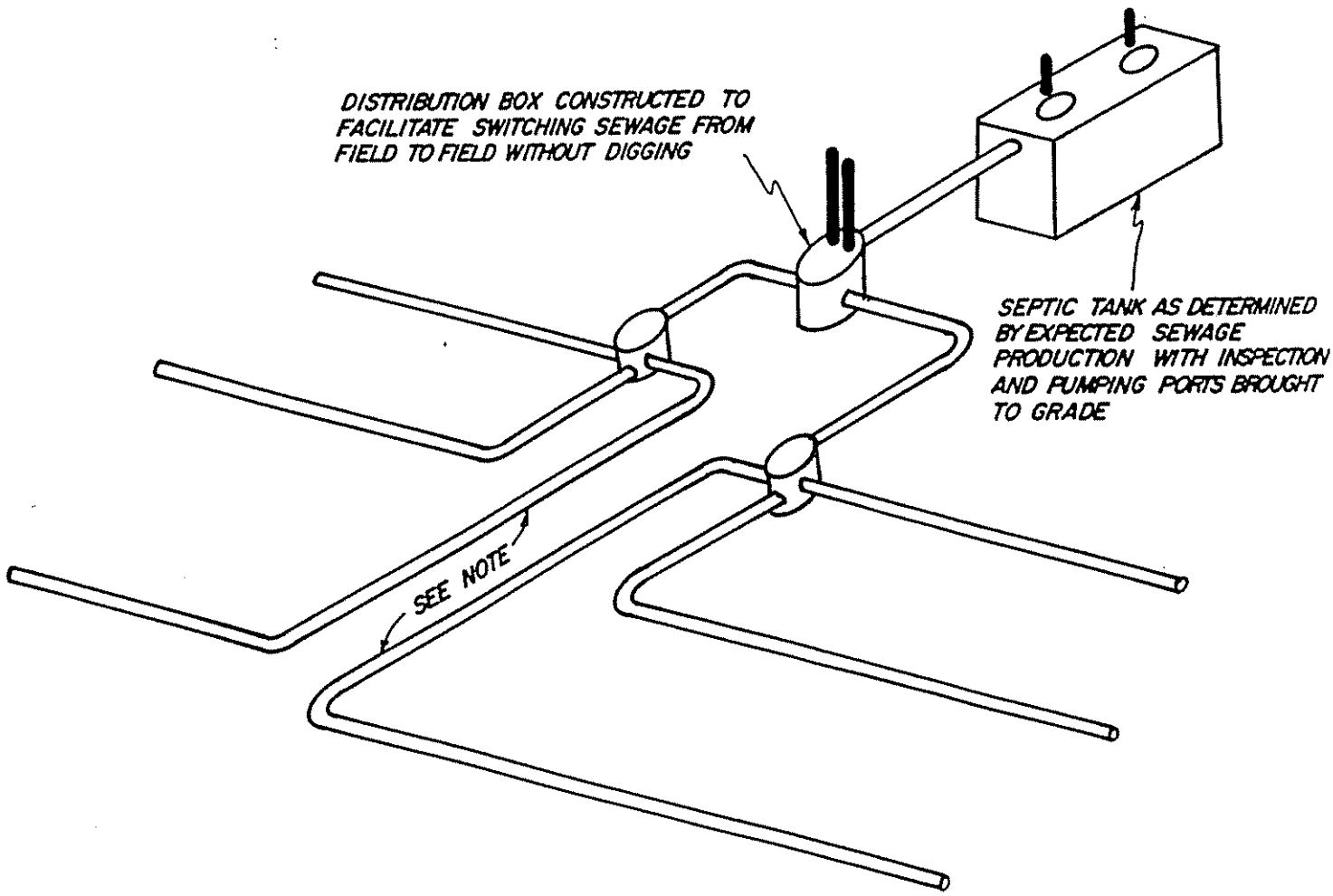

NOTE

TWO LEACH FIELDS, EACH DESIGNED TO TAKE EXPECTED SEWAGE FLOW AT THE TIMATED PERCOLATION OF THE SOIL. THE INSTALLATION OF THE SECOND LEACH LINE SATISFIES THE REQUIREMENTS FOR 100% EXPANSION AREA

SHASTA COUNTY
DEPT. OF RESOURCE MANAGEMENT
ENVIRONMENTAL HEALTH DIVISION

(CERTIFIED SPECIAL DESIGN SYSTEM NO. 2)

LEACH LINES IN SOIL WITH EXCESSIVE PERMEABILITY
WITH PERCOLATION RATES BETWEEN 1 AND 5 MINUTES PER INCH
THIS SYSTEM IS USED IN SITUATIONS WHERE THE SOIL IS PERMEABLE
BUT DOES NOT HAVE OPEN CRACKS OR CREVICES

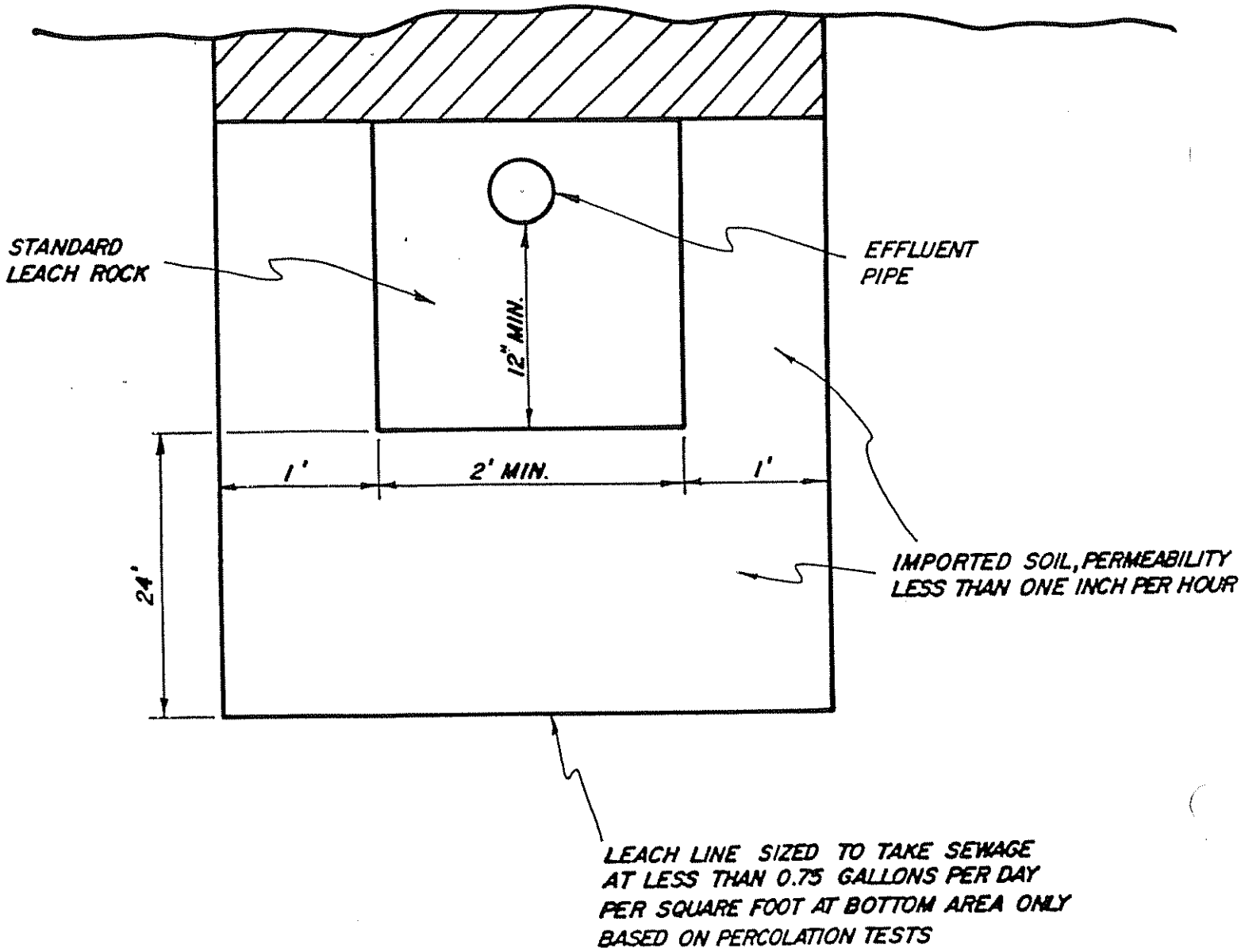

SHASTA COUNTY
DEPT. OF RESOURCE MANAGEMENT
ENVIRONMENTAL HEALTH DIVISION

(CERTIFIED SPECIAL DESIGN SYSTEM NO.3)

LEACH LINE PROTECTED BY A CURTAIN DRAIN
THIS DESIGN IS TO BE USED TO MITIGATE HIGH WATER TABLES FOR SLOPING GROUND GREATER THAN 0.05 FEET PER FOOT

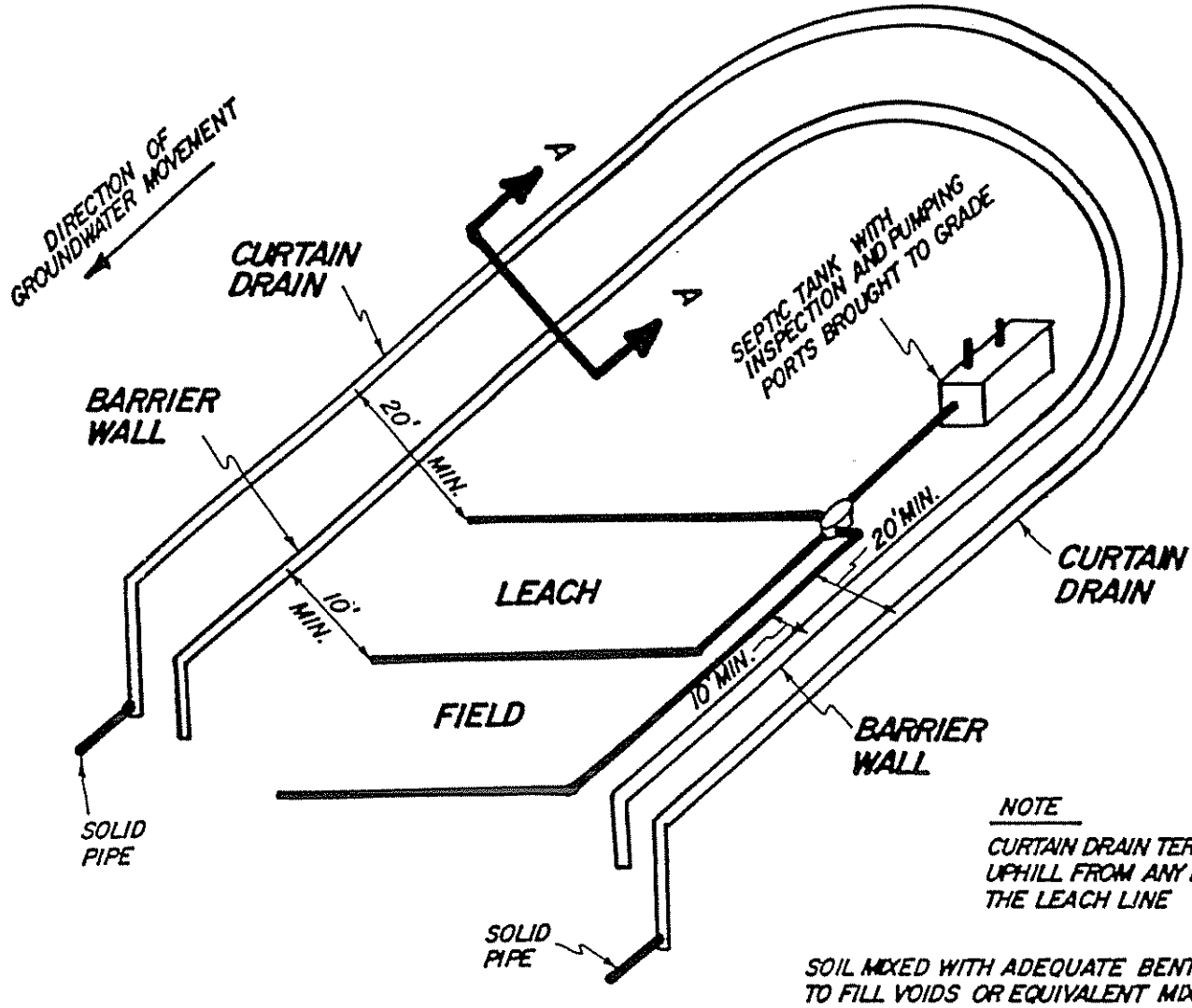

NOTE

CURTAIN DRAIN TERMINATES UPHILL FROM ANY PART OF THE LEACH LINE

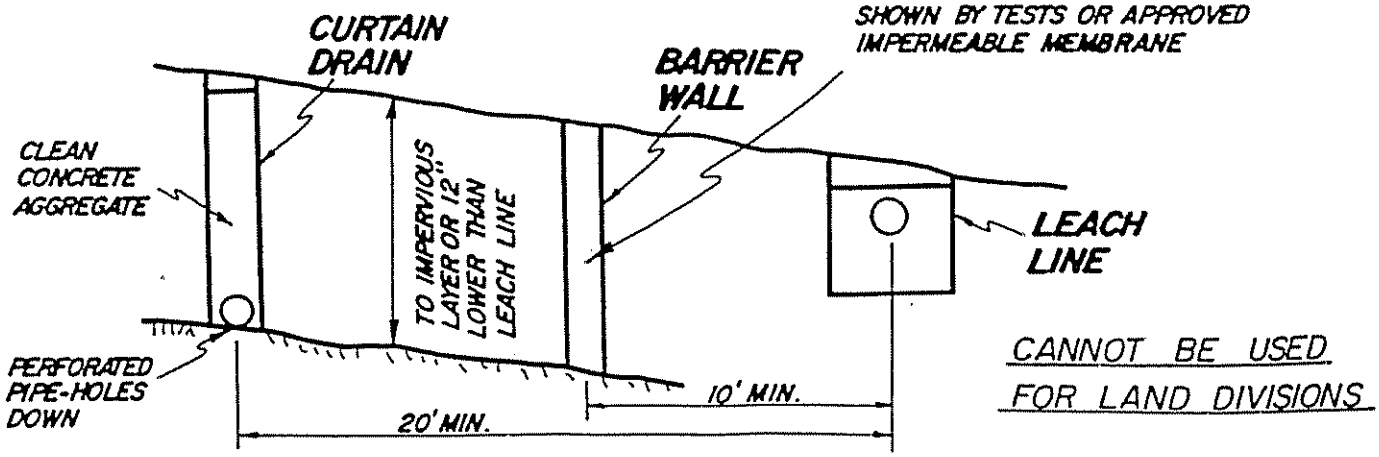

CANNOT BE USED FOR LAND DIVISIONS

SECTION A-A

SHASTA COUNTY
DEPT. OF RESOURCE MANAGEMENT
ENVIRONMENTAL HEALTH DIVISION

(CERTIFIED SPECIAL DESIGN SYSTEM NO.4)

PRESSURIZED TIGHT LINE MOVING SEPTIC TANK EFFLUENT FROM SEPTIC TANK TO LEACH LINES WHERE TOPOGRAPHY WILL NOT ALLOW GRAVITY FLOW. (LEACH LINES TO BE INSTALLED FOR GRAVITY FLOWS)

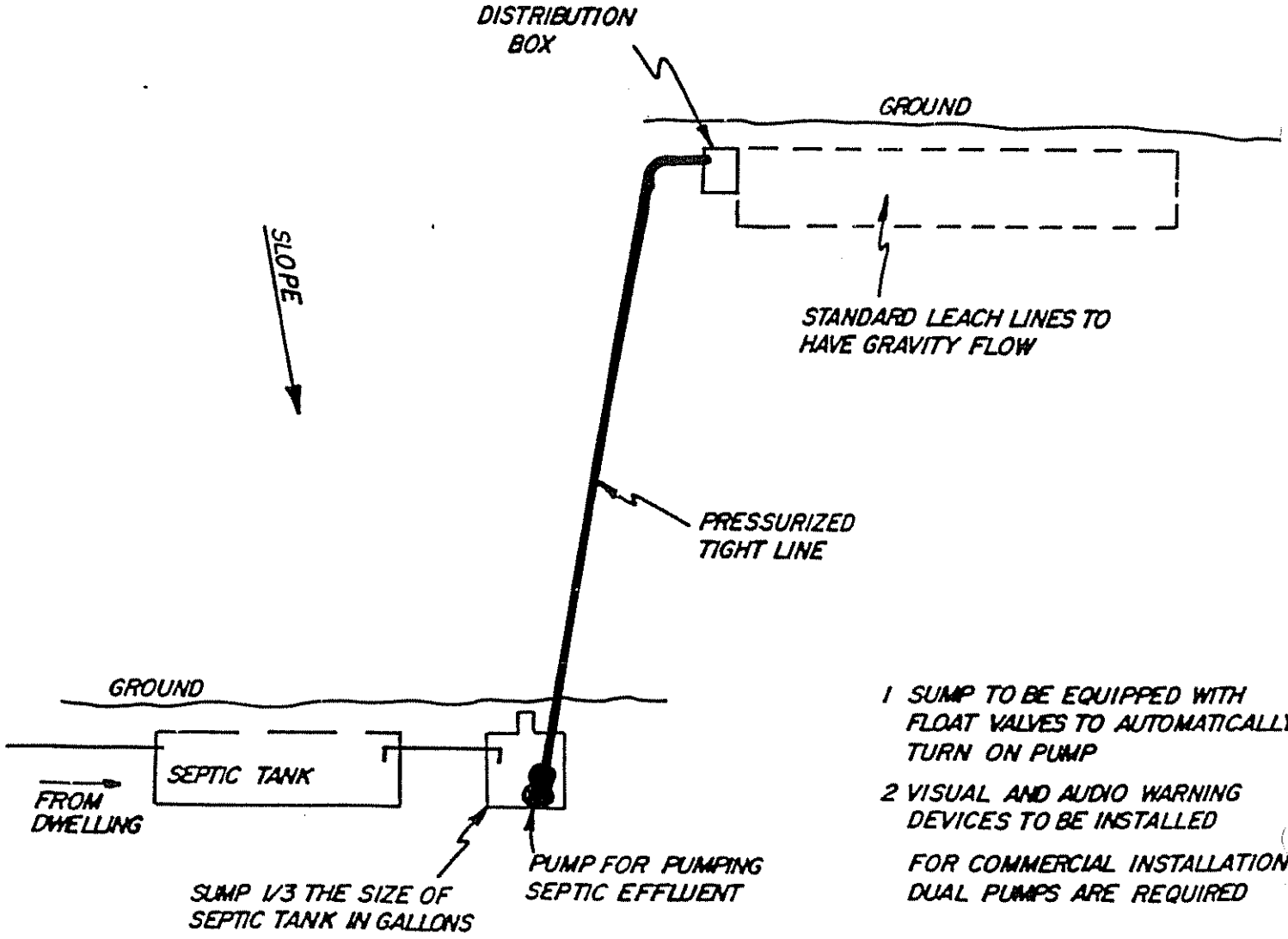

1 SUMP TO BE EQUIPPED WITH FLOAT VALVES TO AUTOMATICALLY TURN ON PUMP

2 VISUAL AND AUDIO WARNING DEVICES TO BE INSTALLED

FOR COMMERCIAL INSTALLATIONS DUAL PUMPS ARE REQUIRED

SHASTA COUNTY
DEPT. OF RESOURCE MANAGEMENT
ENVIRONMENTAL HEALTH DIVISION

(CERTIFIED SPECIAL DESIGN SYSTEM NO.5)

LEACH FIELD ON STEEPLY SLOPING GROUND, FOR SLOPE GREATER THAN 0.30 FEET PER FOOT

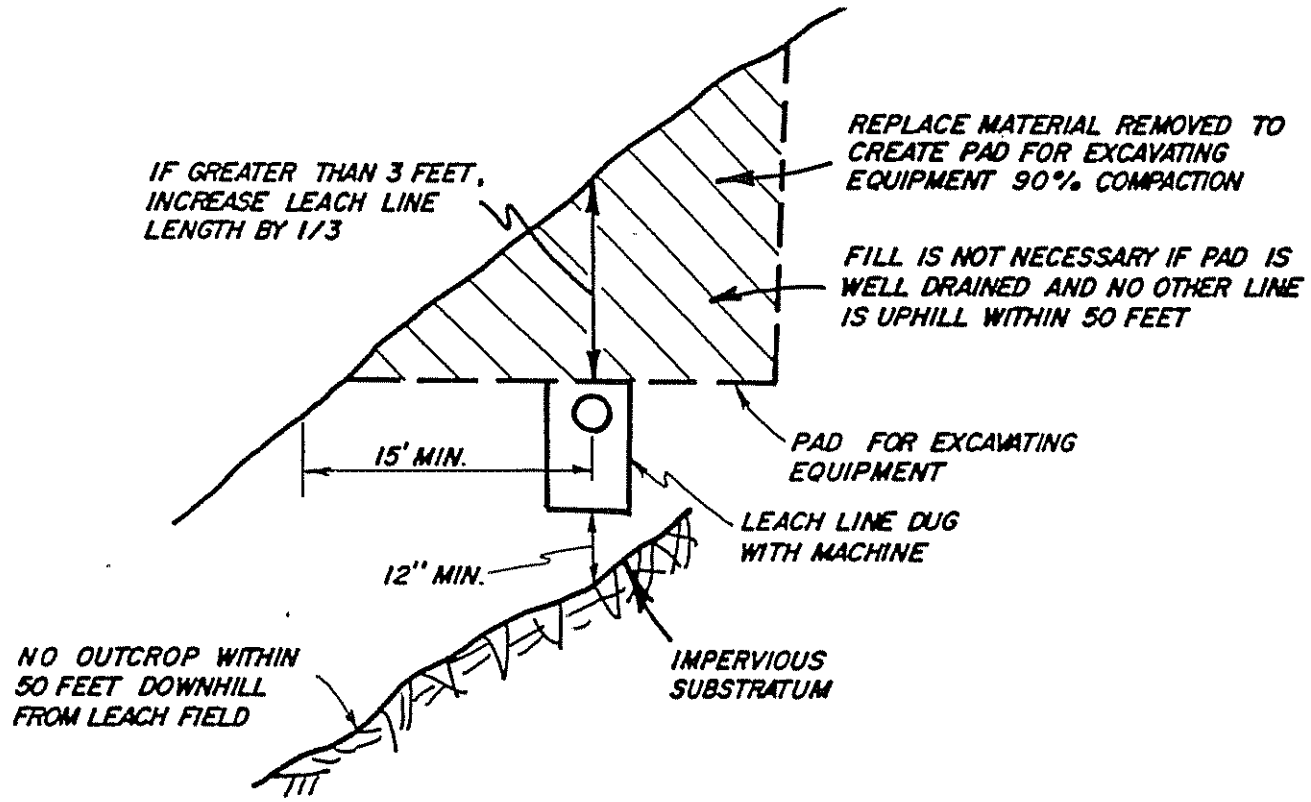

CANNOT BE USED

FOR LAND DIVISIONS

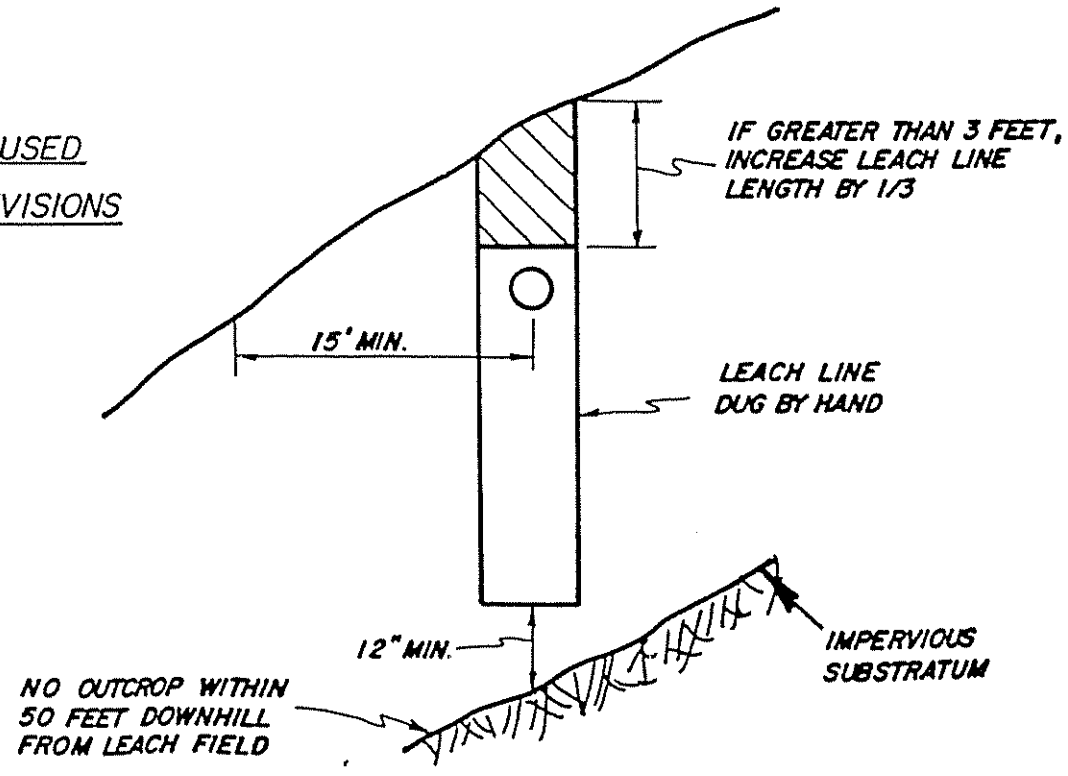

SHASTA COUNTY
DEPT. OF RESOURCE MANAGEMENT
ENVIRONMENTAL HEALTH DIVISION

(CERTIFIED SPECIAL DESIGN SYSTEM NO.6)

SHALLOW LEACH FIELD
THIS SYSTEM IS TO MITIGATE SHALLOW WATER TABLES OR IMPERVIOUS SUBSTRATA ON LAND SLOPING LESS THAN 0.05 FEET PER FOOT

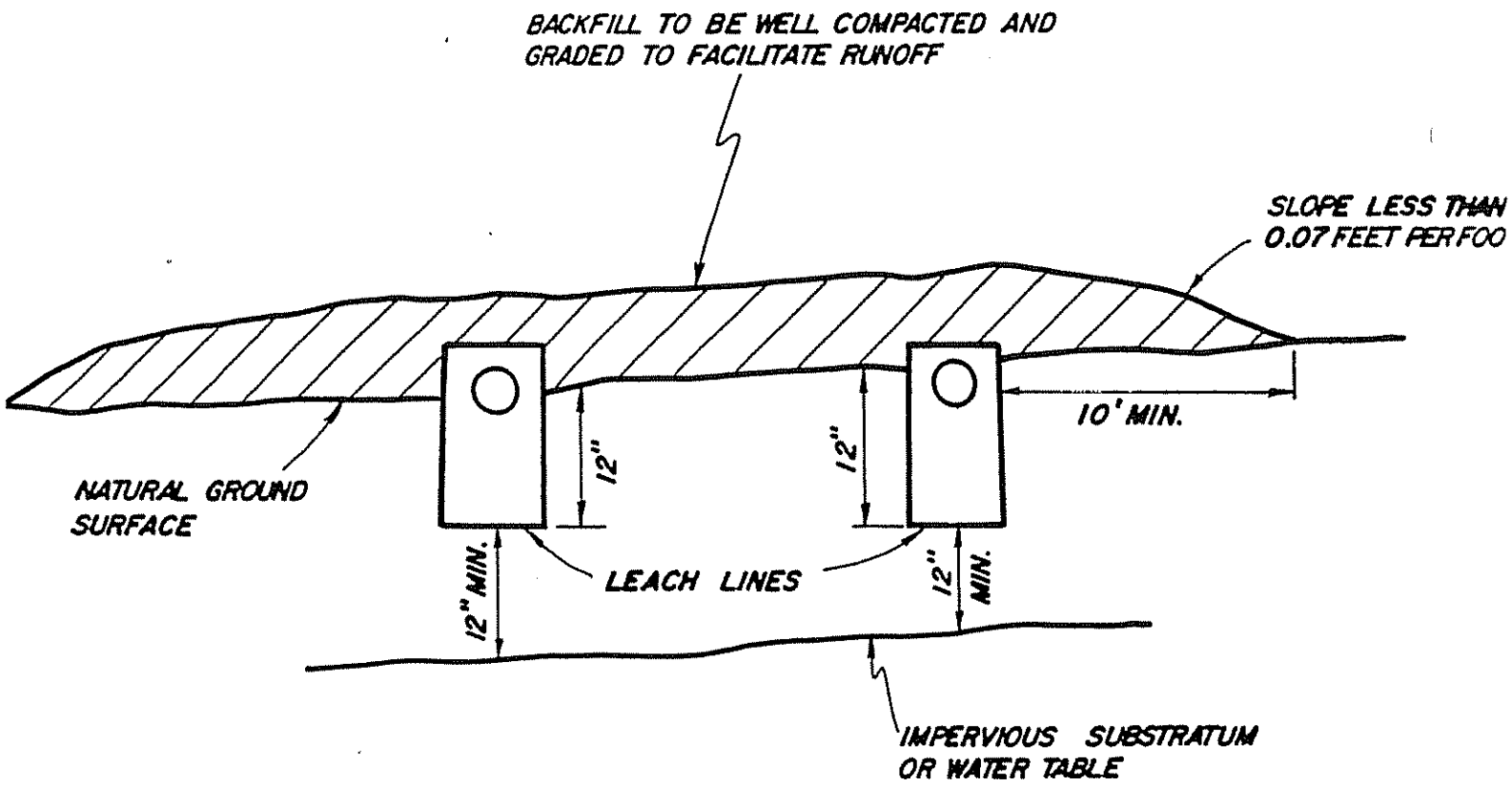

CANNOT BE USED
FOR LAND DIVISIONS

CHAPTER 6

FIRE SAFETY STANDARDS

Adopted:	September 22, 1981
Revised:	August 7, 1986
	September 29, 1988
	April 1, 1992
	September 4, 1992
	May 15, 2001
	June 1, 2003
	September 15, 2004
	December 1, 2015

6.0 GENERAL POLICIES

6.01 AUTHORITY

These standards are Shasta County Fire Safety Standards and are adopted by the Board of Supervisors. These standards are inclusive of "State Responsibility Area (SRA) Fire Safe Regulations". These standards shall be administered and implemented by the County Fire Warden, his or her designees, and as otherwise authorized by the Board of Supervisors by adoption of these standards.

6.02 SCOPE

These standards are a component of the Shasta County Development Standards and enhance public and firefighter safety by establishing criteria for development. Addressed within this document are public and emergency responder access requirements, fire protection water standards, building construction standards, fuel modification, and storage and dispensing of flammable and combustible liquids.

These standards shall apply to subdivisions, parcel maps, use permits, administrative permits, building permits, mobile home installation permits, and any other developments which require the issuance of a permit by the County of Shasta.

6.03 CONSISTENCY WITH OTHER STANDARDS AND REGULATIONS

a. Portions of these standards are required by the California Code of Regulations (CCR) Title 14, Division 1.5, Chapter 7, Subchapter 2, Articles 1-5. Such sections are noted with the CCR section in parenthesis after the section. As minimum State of California Regulations, these sections would supersede other Shasta County regulations and standards.

b. Sections not noted with the CCR in parenthesis are locally adopted standards which exceed or differ from the requirements of the regulations of the State of California. These standards are adopted by resolution and may be superseded by other Shasta County Ordinances.

c. These standards are intended to be minimum standards. If other County Standards require a higher standard of development, then the other standard prevails. Where these standards require a higher standard of development, these standards prevail.

6.04 DEFINITIONS (CCR T.14, Section 1271.00)

Accessory building: Any building used as an accessory to residential, commercial, recreational, industrial, or educational purposes as defined in the California Building Code, 1989 Amendments, Chapter 11, Group M, Division 1 Occupancy that requires a building permit.

Agriculture: Land used for agricultural purposes as defined in a local jurisdiction's zoning ordinances.

All Weather Access Road: Road surface with suitable aggregate material over compacted subgrade soil.

Building: Any structure used or intended for supporting or sheltering any use of occupancy that is defined in the California Building Code, 1989 Amendments, Chapter 11, except Group M, Division 1 , Occupancy. For the purposes of this subchapter, building includes mobile homes and manufactured homes, churches, and day care facilities.

CDF: California Department of Forestry and Fire Protection.

Dead-end road: A road that has only one point of vehicular ingress/egress, including cul-de-sacs and looped roads.

Defensible space: The area within the perimeter of a parcel, development, neighborhood or community where basic wildland fire protection practices and measures are implemented, providing the key point of defense from an approaching wildfire or defense against encroaching wildfires or escaping structure fires. The perimeter as used in this regulation is the area encompassing the parcel or parcels proposed for construction and/or development, excluding the physical structure itself. The area is characterized by the establishment and maintenance of emergency vehicle access, emergency water reserves, street names and building identification, and fuel modification measures.

Development: "Development" means the uses to which the land shall be put, the buildings to be constructed on it, and all alterations of the land and construction incident thereto.

Director: Director of the Department of Forestry and Fire Protection or his/her designee.

Distance Measurements: All specified or referenced distances are measured along the ground, unless otherwise stated.

Driveway: A vehicular access that serves no more than two parcels, with no more than three dwelling units on a single parcel, and any number of accessory buildings.

Dwelling unit: Any building or portion thereof which contains living facilities, including provisions for sleeping, eating, cooking and/or sanitation for not more than one family.

Exception: An alternative to the specified standard requested by the applicant that may be necessary due to health, safety, environmental conditions, physical site limitations or other limiting conditions such as recorded historical sites, that provide mitigation of the problem.

Fire valve: See hydrant.

Fuel modification area: An area where the volume of flammable vegetation has been reduced, providing reduced fire intensity and duration.

Greenbelts: A facility or land-use, designed for a use other than fire protection, which will slow or resist the spread of a wildfire. Includes parking lots, irrigated or landscaped areas, golf courses, parks, playgrounds, maintained vineyards, orchards or annual crops that do not cure in the field.

Hammerhead/T: A roadway that provides a "T" shaped, three-point turnaround space for emergency equipment, being no narrower that the road that serves it.

Hydrant: A valved connection on a water supply/storage system, having at least one 2 1/2 inch outlet, with male American National Fire Hose Screw Threads (NH) used to supply fire apparatus and hoses with water.

Local Jurisdiction: Any county, city/county agency or department, or any locally authorized district that issues or approves building permits, use permits, tentative maps or tentative parcel maps, or has authority to regulate development and construction activity.

Maintenance of Defensible Space Measures: To ensure continued maintenance of properties in conformance with these standards and measures and to assure continue availability, access, and utilization of the defensible space provided for these standards during a wildfire, provisions for annual maintenance shall be included in the development plans and/or shall be provided as a condition of the permit, parcel or map approval.

Occupancy: The purpose for which a building, or part thereof, is used or intended to be used.

One-way road: A minimum of one traffic lane width designed for traffic flow in one direction only. Roads, streets, private lanes: Vehicular access to more than one parcel; access to any industrial or commercial occupancy; or vehicular access to a single parcel with more than two buildings or four or more dwelling units.

Roadway: Any surface designed, improved, or ordinarily used for vehicle travel.

Roadway structures: Bridges, culverts, and other appurtenant structures which supplement the roadway bed or shoulders.

Same Practical Effect: As used in this subchapter means an exception or alternative with the capability of applying accepted wildland fire suppression strategies and tactics, and provisions for fire fighter safety, including:
(a) access for emergency wildland fire equipment,
(b) safe civilian evacuation,
(c) signing that avoids delays in emergency equipment response,
(d) available and accessible water to effectively attack wildfire or defend a structure from wildfire, and
(e) fuel modification sufficient for civilian and fire fighter safety.

State Board of Forestry (SBOF): A nine member board, appointed by the Governor, which is responsible for developing the general forest policy of the state, for determining the guidance policies of the Department of Forestry and Fire Protection, and for representing the state's interest in federal land in California.

State Responsibility Area (SRA): As defined in the Public Resources Code section 4126-4127; and the California Code of Regulations, Title 14, Division 1.5, Chapter 7, Article 1, Sections 1220-1220.5.

Structure: That which is built or constructed, an edifice or building of any kind, or any piece of work artificially built up or composed of parts joined together in some definite manner.

Subdivision: As defined in Section 66424 of the Government Code.

Traffic lane: The portion of a roadway that provides a single line of vehicle travel.

Turnaround: A roadway, unobstructed by parking, which allows for a safe opposite change of direction for emergency equipment. Design of such area may be a hammerhead/T or terminus bulb.

Turnouts: A widening in a roadway to allow vehicles to pass.

Vertical clearance: The minimum specified height of a bridge or overhead projection above the roadway.

Wildfire: As defined in Public Resources Code Section 4103 and 4104.

6.1 ACCESS

a. The following standards shall establish minimum access requirements for public safety. The road and driveway networks shall provide safe access for emergency wildland fire equipment and civilian evacuation concurrently and shall provide unobstructed traffic circulation during a wildfire emergency. The road and driveway network shall also provide all-weather, safe access for emergency personnel responding to medical aids, traffic accidents, and structure fires. The standards shall apply to subdivisions, parcel maps, use permits, administrative permits, building permits, mobile home installation permits, and any other developments which require the issuance of a permit by the County of Shasta.

b. In accordance with Sections 6.91 thru 6.94 of these standards, the County Fire Warden or the approving authority may approve or recommend the approval of exceptions to the access standards where the same practical effect can be achieved and where reasonable access can be provided to assure adequate evacuation routes for the public and adequate access routes for emergency personnel and equipment. In determining whether the same practical effect can be achieved, the approving authority shall apply and make findings concerning the performance criteria set forth in Section 6.92.

c. For single family residential building permits and residential mobile home installation permits on existing lawful parcels, off-site improvements will not be required if adequate physical access is existing as determined by the County Fire Warden. Private bridges on access roads must be certified by a licensed engineer when required by the County Fire Warden. If modifications are necessary in order to provide adequate physical access for fire apparatus, then a building or grading permit shall be obtained and the necessary modifications shall be made.

d. For administrative and use permits, off-site improvements will not be required on public roads and streets constructed prior to January 1, 1992, if adequate physical access exists and the County Fire Warden finds that any increase in personal density created by the project will not adversely affect public safety.

6.11 GENERAL ROAD DESIGN REQUIREMENTS

Scope:

It shall be the intent of the Fire Safety Standards to provide for safe access for emergency fire equipment, civilian evacuation, and unobstructed traffic circulation by requiring the construction of continuous or through roadways and limiting the length and use of dead-end roads.

6.11.1 Dead-end Road Length:

The maximum length of a dead-end road shall not exceed the following cumulative lengths, regardless of the number of parcels served. Cumulative lengths refer to the combined lengths of dead-end roads accessed from the particular dead-end road in question.

Parcels less than one acre in size - 800 feet
Parcels one acre or larger in size - 1000 feet

All lengths shall be measured from the edge of the roadway surface at the intersection that begins the road to the end of the road surface at its farthest point. Where a dead-end road crosses areas of differing zoned parcel sizes, requiring different length limits, the shortest allowable length shall apply. (CCR T.14, Section 1273.09)

All specified or referenced distances are measured along the ground, unless otherwise stated. (CCR T.14, Section 1271.05)

6.11.1.1 Exception:

The County Fire Warden or approving authority may grant an exception to the maximum length dead-end road standards for parcels 40 acres or larger in size providing the cumulative dead-end road(s) servicing such a parcel are not over 5280 feet in length. In considering such an exception, the County Fire Warden or approving authority shall make findings that the exception does not adversely affect public safety in the area.

6.11.2 Construction Standard:

Continuous or through roads constructed in areas designated by the General Plan as Urban (UR), Suburban (SR), Commercial (C) and Industrial (I) shall be constructed in accordance with Chapter 2 of the Development Standards. Continuous or through roads constructed in all other areas, may be constructed as emergency fire escape roads as determined by the County Fire Warden and the Director of the Department of Public Works. Emergency fire escape roads shall be constructed in accordance with the minimum road standards as specified in Section 6.14 of the Fire Safety Standards.

6.11.3 Density:

Deleted

6.11.4 Open Space and Greenbelts:

Projects creating open space and greenbelt areas shall provide adequate fire department access to such areas as determined by the County Fire Warden or approving authority.

6.12 PRIVATE ROAD, PUBLIC ROAD, AND NON- RESIDENTIAL DRIVEWAY STANDARDS

a. The following standards are minimum standards and may be superseded by the requirements of Chapter 2 of the Development Standards when said requirements are more stringent then these minimum standards.

b. Non-residential driveways shall provide fire department access from nearest Shasta County recognized private or public roadway to within 150 feet of any portion of the exterior wall of each building on the premises. An exception to subsection (b) may be approved by the County Fire Warden when buildings (s) are completely protected with an approved automatic fire sprinkler system.

c. Following are minimum roadway and non-residential driveway construction standards:

1. Road Width – Minimum driving surface of two 10-foot traffic lanes. These traffic lanes shall provide for two-way traffic flow to support emergency vehicle and civilian egress.
(CCR T.14, Section 1273.01)

2. Shoulders – one (1) foot wide on each side of driving surface.

3. Vertical Clearance – Fifteen (15) feet, unobstructed.
(CCR T.14, Section 1273.10)

4. Roadway Surface -

a. Roadways shall be designed and maintained to support the imposed load of fire apparatus weighing at least 75,000 pounds and provide an all-weather aggregate road base. Applicant shall provide engineering specifications to support design if requested by the County Fire Warden. (CCR T.14, Section 1273.02)

b. Those portions of roadways and driveways with grades greater than 12% shall be paved in accordance with Chapter 2 of the Development Standards.

5. Roadway Radius - (CCR T.14, Section 1273.04)

a. Not less than 50 feet inside radius

b. Curves having an inside radius of 50-100 feet shall have a minimum surfacing width of 22 feet.

c. Curves having an inside radius of 100-200 feet shall have a minimum surfacing width of 20 feet.

d. Vertical Curvature – Vertical curves shall be designed by a licensed engineer to accommodate fire apparatus.

6. Roadway Turnarounds

a. Dead-end roads shall be provided with a turnaround. (CCR T.14, Section 1273.05 / 1273.09 / Figure 2-40)

b. Dead-end non-residential driveways over 150 feet in length shall be provided with a turnaround within 50 feet of the building.

c. Turnarounds are required on driveways and dead-end roads. The turning radius on a turnaround shall be forty (40) feet from the center line of the road, not including parking. (CCR T.14, Section 1273.05 / Figure 2-40)

d. Hammerhead or "T" turnarounds may be approved for parcel maps by the approving authority upon considering recommendations by the Department of Public Works and the County Fire Warden. Alternative turnarounds shall be constructed in accordance with Figure 2-40.

e. Hammerhead or "T" turnarounds may be approved on non-residential driveways by the County Fire Warden. Alternative turnarounds shall be constructed in accordance with Figure 2-40.

7. Hydrant Turnouts

a. Roads and commercial driveways less than 28 feet in width shall be provided with turnouts at each fire hydrant.

b. Turnouts shall be a minimum of 12 feet wide and 30 feet long with a minimum 25 foot taper at each end. (CCR T.14, Section 1273.06 / 1275.15 / Figure FS-4)

c. An exception to the turnout requirement may be granted by the County Fire Warden when fire hydrants are required at intersections.

8. Roadway Structures (Bridges, Culverts, etc.) (CCR T.14, Section 1273.07

a. All non-residential driveway, road, street, and private lane roadway structures shall be constructed to carry at least the maximum load and provide the minimum vertical clearance as required by Vehicle Code Sections 35250, 35550, and 35750.

b. Appropriate signing, including but not limited to weight or vertical clearance limitations, one-way road or single lane conditions, shall reflect the capability of each bridge.

c. One-lane bridges shall provide unobstructed visibility from one end to the other and shall be provided with turnouts at both ends per Figure FS-4.

d. Where a bridge or an elevated surface is part of a fire apparatus access road, the bridge shall be constructed and maintained in accordance with the American Association of State and Highway Transportation Officials Standard Specifications for Highway Bridges, 17th Edition, published 2002 (known as HL-93).

e. Bridges and elevated surfaces shall be designed for a live load sufficient to carry the imposed loads of fire apparatus. Vehicle load limits shall be posted at both entrances to bridges when required.

f. Where elevated surfaces designed for emergency vehicle use are adjacent to surfaces which are not designed for such use, barriers, or signs, or both, as approved by the County Fire Warden, shall be installed and maintained.

9. Grades – shall not exceed 16%. (CCR T.14, Section 1273.03)

10. All one-way roads shall be constructed to provide a minimum, not including shoulders, of one 12-foot traffic lane. The County Fire Warden may approve one-way roads. All one-way roads shall connect to a two-lane roadway at both ends, and shall provide access to an area currently zoned for no more than ten (10) dwelling units. In no case shall it exceed 2,640 feet in length. A turnout shall be placed and constructed at approximately the midpoint of each one-way road. (CCR T.14, Section 1273.08)

11. Obstructions – minimum widths and vertical clearance shall be maintained.

12. Gate Entrances (CCR T.14, Section 1273.11)

a. Gate entrances shall be at least two (2) feet wider than the width of the traffic lane(s) serving that gate and a minimum width of fourteen (14) feet unobstructed horizontal clearance and unobstructed vertical clearance of fifteen (15) feet.

b. Gates shall be set back a minimum of 30 feet from the edge of pavement of adjacent roadways.

c. Security gates shall not be installed without approval and where security gates are installed, they shall have an approved means of emergency operation. Approval shall be by the County Fire Warden. The security gates and the emergency operation shall be maintained operational at all times.

d. Where a one-way road with a single traffic lane provides access to a gated entrance, a forty (40) foot turning radius shall be used. (Figure 2-40)

13. Speed Control Bumps on private roads and driveways shall not exceed four (4) inches in height.

14. Turnouts shall be a minimum of twelve (12) feet wide and thirty (30) feet long with a minimum twenty-five (25) foot taper on each end. (CCR T.14, Section 1273.06 / Figure FS-4)

6.13 RESIDENTIAL DRIVEWAY STANDARDS

a. The following standards are minimum driveway standards to be applied to residential driveways serving no more than three (3) residences located on a single parcel. Residential driveways servicing four (4) or more residences shall meet the requirements of Section 6.12. (CCR T.14, Section 1271.00 / 1273.10)

b. Residential driveways shall provide fire department access from the nearest Shasta County recognized private or public roadway to within 50 feet of each residence on the parcel. (CCR T.14, Section 1273.10)

c. Following are minimum residential driveway standards:

1. Driveway Road Width

    a. Sixteen (16) feet, unobstructed.

    b. The County Fire Warden may approve widths of twelve (12) feet for short distances. The lesser widths may be utilized at bridges, culverts, gates, and cattle guards, and in areas where unique topographic conditions exist.

2. Driveways exceeding 150 feet in length, but less than 800 feet in length, shall provide a turnout near the midpoint of the driveway. Where the driveway exceeds 800 feet, turnouts shall be provided no more than 400 feet apart. (CCR T.14, Section 1273.10)

3. Shoulders – One (1) foot wide on each side of driveway.

4. Vertical clearance, fifteen (15) feet, unobstructed. (CCR T.14, Section 1273.10)

5. Driveway Roadway Surface

    a. Capable of supporting a 40,000 pound load. Applicant shall provide engineering specifications to support design, if requested by the County Fire Warden. (CCR T.14, Section 1273.02)

    b. All-weather surface width of not less than twelve (12) feet of the driveway. Minimum surface thickness of 4” of compacted class 3 aggregate base rock.

    c. Driveways with a grade of over 12% slope shall be paved in accordance with the flaglot driveway standard in Figure 2-16 of the Development Standards.

6. Driveway Roadway Radius (CCR T.14, Section 1273.04)

a. Horizontal curves shall have an inside radius of not less than 50 feet.

b. Vertical curves shall have a minimum length of not less than 100 feet or be designed to accommodate fire equipment as approved by the County Fire Warden or approving authority. (Figure FS-5)

7. Driveway Roadway Turnarounds

a. A turnaround shall be provided to all developed and undeveloped building sites on driveways over 300 feet in length and shall be within 50 feet of the building. (CCR T.14, Section 1273.10)

b. Turnarounds shall be constructed in accordance with the Shasta County Development Standards. (CCR T.14, Section 1273.05 / Figure 2-42)

8. Hydrant Turnouts – If a fire hydrant is located along a residential driveway, then a turnout shall be provided per Attachment FS-4. (CCR T.14, Sections 1273.06 / 1275.15 / Figure FS-4)

9. Driveway Roadway Structures (Bridges and Culverts): (CCR T.14, Section 1273.07)

a. Bridges having limitations shall be posted with signs designating the limitations including vertical clearance and weight limitations. (CCR T.14, Section 1273.07)

b. Signage, including but not limited to weight or vertical clearance limitations, one-way road or single lane conditions, shall reflect the capability of each bridge.

c. Where a bridge or an elevated surface is part of a fire apparatus access road, the bridge shall be constructed and maintained in accordance with the American Association of State and Highway Transportation Officials Standard Specifications for Highway Bridges, 17th Edition published 2002 (known as AASHTO HL-93).

d. Bridges and elevated surfaces shall be designed for a live load sufficient to carry the imposed loads of fire apparatus. Vehicle load limits shall be posted at both entrances to bridges when required.

e. Where elevated surfaces designed for emergency vehicle use are adjacent to surfaces which are not designed for such use, barriers, or signs, or both, as approved by the County Fire Warden, shall be installed and maintained.

10. Grades shall not exceed 16%. (CCR T.14, Section 1273.03)

11. Driveway Gate Entrances (CCR T.14, Section 1273.11)

    a. Gate entrances shall be at least (2) two feet wider than the traffic lanes serving that gate and a minimum width of 14 feet unobstructed horizontal clearance and unobstructed vertical clearance of 15 feet.

    b. Gates shall be set back a minimum of 30 feet from the edge of pavement of the adjacent roadway.

    c. Gates shall not be installed without prior approval and shall have an approved means of emergency operation. Any gate and emergency operation of that gate shall be maintained at all times.

6.14 EMERGENCY FIRE ESCAPE ROAD (EFER) STANDARDS

Scope:

The following construction standards shall apply to the creation of an emergency fire escape road. The construction standards shall apply only to the emergency fire escape road and not an existing road unless a portion of an existing road becomes part of an emergency fire escape road.

The following standards are minimum standards and may be superseded by the requirements of Chapter 2 of the Development Standards.

6.14.1 Definition:

Emergency Fire Escape Road: A road designed and constructed primarily to provide an alternate route of civilian vehicular egress, in the event of a wildfire, from an area accessed by only one ingress/egress road, and that the area served by the one ingress/egress road exceeds the minimum dead-end road length as indicated in Section 6.11.

6.14.2 Delineation:

Applicant shall submit improvement plans indicating the proposed location and placement of the emergency fire escape road to the Shasta County Fire Department and the Department of Public Works.

6.14.3 Location and Placement:

The County Fire Warden and the Director of the Department of Public Works shall determine the final location and placement of emergency fire escape roads. Emergency fire escape roads shall be located in relationship to topography, fuel types and fuel density in the project area, and serviceability of existing ingress road.

Emergency fire escape roads shall provide a second means of vehicular egress and shall be sufficiently separated from the primary vehicular ingress road to prevent both roadways from being simultaneously obstructed during a wildland fire.

6.14.4 Right of Ways:

Right-of-ways or easements shall be a minimum of 30-feet in width and shall be sufficient to permit construction and maintenance of the required road improvements. Applicant shall acquire and offer rights-of-ways or easements for dedication to the County of Shasta.

6.14.5 Construction Standards:

Emergency fire escape roads shall be either:

a. Constructed to the standards of a permanent road division emergency fire escape road pursuant to Section 6.14.6 and be maintained by the permanent road division or,

b. Constructed to the standards of a paved emergency fire escape road pursuant to Section 6.14.7.

6.14.6 Permanent Road Division Emergency Fire Escape Road Construction Standards:

Emergency fire escape roads constructed as a permanent road division emergency fire escape road shall be constructed to the following standards and as shown in Figure FS-8.

6.14.6.1 Road Width:

a. Minimum driving surface of two 10-foot traffic lanes. These traffic lanes shall provide for two-way traffic flow to support emergency vehicle and civilian egress. (CCR T.14, Section 1273.01)

b. A vegetative clear zone shall be created on each of the road by removing vegetation smaller than 6-inches in diameter a minimum of 4 feet beyond the edge of the road.

c. Shoulders – One (1) foot wide on each side of roadway.

6.14.6.2 Roadway Surface:

Shall be 20-foot wide.

Roadways shall be designed and maintained to support the imposed load of fire apparatus weighing at least 75,000 pounds and provide an aggregate base. Project proponent shall provide engineering specifications to support design, if requested by the local authority having jurisdiction. (CCR T.14, Section 1273.02)

6.14.6.3 Vertical Clearance:

Vertical clearance shall not be less than 15 feet unobstructed.
(CCR T.14, Section 1273.10)

6.14.6.4 Grades:

Grades shall not exceed 16%. (CCR T.14, Section 1273.03)

6.14.6.5 Roadway Radius: (CCR T.14, Section 1273.04)

a. Horizontal curves shall have an inside radius of not less than 50 feet.

b. Curves having an inside radius of 50-100 feet shall have a minimum surfacing width of 22 feet.

c. Curves having an inside radius of 100-200 feet shall have a minimum surfacing width of 20 feet.

6.14.6.6 Vertical Curvature:

The length of vertical curves in roadways, exclusive of gutters, ditches, and drainage structures designed to hold or divert water, shall be not less than 100 feet.
(CCR T.14, Section 1273.04)

6.14.6.7 Roadway Structures (Bridges and Culverts): (CCR T.14, Section 1273.07)

a. Where a bridge or an elevated surface is part of a fire apparatus access road, the bridge shall be constructed and maintained in accordance with the American Association of State and Highway Transportation Officials Standard Specifications for Highway Bridges, 17th Edition, published 2002 (known as AASHTO HL-93).

b. Bridges and elevated surfaces shall be designed for a live load sufficient to carry the imposed loads of fire apparatus. Vehicle load limits shall be posted at both entrances to bridges when required.

c. Where elevated surfaces designed for emergency vehicle use are adjacent to surfaces which are not designed for such use, barriers, or signs, or both, as approved by the County Fire Warden, shall be installed and maintained.

6.14.6.8 Gate Entrances:

Gates may be installed in areas so that an emergency fire escape road not provide through access on a continual basis.

a. Gate entrances shall be at least two (2) feet wider than the width of the traffic lane(s) serving that gate. (CCR T.14, Section 1273.11)

b. Gates shall be designed to open without the use of a key, tools, or any special knowledge or effort. Gates shall not be locked together rendering the "break away" gate post inoperable.

c. Gates shall not be locked or rendered unusable by using chains, bolts, and latches or barricaded unless approved and installed per Figure FS-4.

d. EFER gate location/placement shall be approved by the County Fire Warden.

6.14.6.9 Identification:

a. Signs shall be constructed and installed adjacent to the beginning of the emergency fire escape road as shown in Figure FS-9.

b. Road reflectors shall be utilized as deemed appropriate by the County Fire Warden and the Director of Public Works.

6.14.7 Paved Emergency Fire Escape Road Construction Standards:

Emergency fire escape roads constructed as paved emergency fire escape roads shall be constructed to the same standards in accordance with Section 6.14.6 as a permanent road division emergency fire escape road, except that the aggregate base shall be surfaced with 0.17' X 20' of asphalt concrete as shown in Figure FS-8.

6.14.8 Roadway Structures (Bridges and Culverts): (CCR T.14, Section 1273.07)

a. All road, street, and private lane roadway structures shall be constructed to carry at least the maximum load and provide the minimum vertical clearance as required by Vehicle Code Sections 35250, 35550, and 35750.

b. Appropriate signing, including but not limited to weight or vertical clearance limitations, shall reflect the capability of each bridge.

c. Where a bridge or an elevated surface is part of a fire apparatus access road, the bridge shall be constructed and maintained in accordance with the American Association of State and Highway Transportation Officials Standard Specifications for Highway Bridges, 17th Edition, published 2002 (known as AASHTO HL-93).

d. Bridges and elevated surfaces shall be designed for a live load sufficient to carry the imposed loads of fire apparatus. Vehicle load limits shall be posted at both entrances to bridges when required.

e. Where elevated surfaces designed for emergency vehicle use are adjacent to surfaces which are not designed for such use, barriers, or signs, or both, as approved by the County Fire Warden, shall be installed and maintained.

6.2 STREET SIGNS AND BUILDING NUMBERING

6.21 ADDRESS FOR BUILDINGS

a. Every building or structure, except accessory buildings shall be permanently posted with a street address marker located with respect to the nearest public highway, street or road servicing such building or structure so as to be clearly visible and legible at all times from the roadway. Each dwelling unit shall be separately identified. (CCR T.14, Section 1274.08 / Section 1274.10)

b. These numbers shall contrast with their background and addresses shall be Arabic numbers or alphabetic numbers. Numbers shall be a minimum of four (4) inches high, with a minimum stroke width of 0.5-inch reflectorized, contrasting with the background color of the sign. (CCR T.14, Section 1274.09)

c. Each building, except accessory buildings, shall have a permanently posted address which shall be posted at the intersection of the driveway and the road. Addresses shall be visible from both directions of travel. Where multiple addresses are required at a single driveway, they shall be mounted on single post. (CCR T.14, Section 1274.10)

d. Address signs along one-way roads shall be visible from both the direction of travel, and the opposite direction. Where access is by means of a private road and the address cannot be viewed from the public way, a monument, pole or other sign or means shall be used to identify the address.
(CCR T.14, Section 1274.09 / 1274.10)

e. Address posting shall be maintained. (CCR T.14, Section 1274.10

f. Addresses shall be posted at the beginning of construction and shall be maintained thereafter and the address shall be visible and legible from the road on which the address is located. (CCR T.14, Section 1274.10)

g. Where a roadway provides access solely to a single commercial or industrial business, the address sign shall be placed at the nearest road intersection providing access to that site. (CCR T.14, Section 1274.10)

6.22 STREET IDENTIFICATION SIGNING

a. Newly constructed or approved public and private roads shall be identified by a name or number that is non-duplicating and consistent with the Shasta County road naming system. (CCR T.14, Section 1274.04)

b. Signs identifying roads, streets, and private lanes shall be placed at the intersection of those roads, streets and/or private lanes and shall be clearly visible from both directions of travel for a distance of at least 100 feet. (CCR T.14, Sections 1274.02 / 1274.05)

c. Letters and numbers for street and road signs shall be a minimum of 4-inch letter height, 0.5-inch stroke reflectorized, and contrasting with the background color of the sign. (CCR T.14, Section 1274.01)

d. Road, street, and private lane signs required by this article shall be installed prior to final acceptance by the local jurisdiction of road improvements. (CCR T.14, Section 1274.07)

6.23 STREET LIMITATION SIGNING

a. Newly constructed and approved public and private roads shall be provided with signs identifying any access limitations such as weight limitation, vertical clearance, dead-end road, one-way road, single-lane condition, and other similar limitations. (CCR T.14, Section 1274.06)

b. Limitations shall be clearly posted at two locations:

   1. the intersection preceding the traffic limitation

   2. at a location not more than 100 feet before the actual area of traffic limitation (CCR T.14, Section 1274.06)

c. Letters and numbers for street and road signs shall be a minimum of 4-inch letter height, 0.5-inch stroke reflectorized, and contrasting with the background color of the sign. (CCR T.14, Section 1274.01)

d. Road, street, and private lane signs required by this article shall be installed prior to final acceptance by the local jurisdiction of road improvements. (CCR T.14, Section 1274.07)

6.3 FIRE PROTECTION WATER STANDARDS

With A Central Water System

a. The standards in this section apply to new developments within the boundaries of a public or private water service jurisdiction having a pressurized water system that contains water mains that are six inches in diameter or larger in size. The standards in Section 6.31 (c) will not be applied by Shasta County to permit applications for single-family residences on parcels that were created prior to January 1, 1989.

b. For land divisions, the required water system, including hydrants, must be installed and in service or bonded for prior to recording the map.

c. For use permits, building permits and other developments, the required water system must be installed and in service prior to the foundation inspection by the Shasta County Building Division.

d. For single family residential construction, mobile home installation permit or for a building permit for substantial improvements to any such structures as defined by Section 5.01.080 of the Shasta County Ordinance Code, an approved fire hydrant shall be installed at an approved location on water mains four inches or larger in size within 750 feet of the parcel or, the applicant shall contribute to the fire hydrant fund.

6.31 FIRE FLOW AND HYDRANT SPACING

a. New water facilities shall provide the following flow requirements in addition to the average daily demand.

b. Proof of the ability to comply with the fire flow requirements shall be submitted with the application for development. Proof may consist of a letter of certification from the responsible water supply entity.

c. See below:

	Land Use	Min. Flow	Min. Flow w/Sprinklers	Maximum Hydrant Spacing	Maximum Driving Distance *
1.	Single-family residential lots larger than one acre in size***	500 gpm	N/A	750’	750’
2.	Single-family residential lots, one-half to one acre in size.	750 gpm****	N/A	500’	300’
3.	Single-family residential lots, less than one-half acre in size and mobile home parks	1000 gpm****	N/A	500’	300’
4.	Multiple residential, 3-8 units per acre, one story, neighborhood business (C-1 Zone District)	1500 gpm	1000 gpm	500’	300’
5.	Multiple residential, 9 or more units per acre; one and two stories; commercial or industrial buildings not to exceed 10,000 square feet **	2000 gpm	1250 gpm	300’	200’
6.	Multiple residential, 3 stories or higher; commercial or industrial buildings over 10,000 square feet**	2500 gpm	1500 gpm	300’	200’

See next page for asterisked items.

* Maximum Driving Distance from Hydrant to Building

** For specific projects or occupancies, greater fire flows may be required.

*** For land divisions creating large lots, a maximum of one hydrant per proposed building site shall be required.

**** Fire flows of not less than 500 gpm will be acceptable if the responsible water supply entity is implementing an adopted capital improvement plan to upgrade the water system to provide the needed fire flows. Plans shall be approved by the County Fire Warden.

d. Fire flows and hydrant spacing for new developments utilizing the planned development zone district, density averaging or clustering will be based upon the actual density created by the clustering.

e. In order to qualify for the sprinkler fire flow reduction, a building must be completely protected by an automatic sprinkler system installed in accordance with NFPA 13 and the latest edition of the California Building Code Standards. Approved backflow prevention device(s) may be required by the responsible water supply entity.

f. If the fire flows listed above are greater than those required by the Insurance Services Office Guide for Determination of Needed Fire Flow, the lesser fire flow shall be allowed for the development. However, system design may be required to meet higher fire flow requirements for future development or expansion.

g. On residential and commercial projects where minimum fire flow or hydrant size or spacing cannot be achieved, the Fire Warden may, where reasonable fire protection can otherwise be supplied, approve reduced fire flows, hydrant size or increase spacing if alternate facilities or construction methods can be provided to assure reasonable fire protection.

6.32 DURATION

The minimum fire flow requirements detailed in Section 6.31 above shall be sustained for a period of at least two hours.

6.33 PRESSURE

The water supply system shall be designed to maintain normal operating pressures of not less than 20 psig at the required fire flow. Static pressure at the hydrant should not exceed 150 psig.

6.34 WATER LINE SIZE AND DESIGN

The distribution system shall be of adequate size and so designed, in conjunction with related facilities, to maintain the minimum fire flow and pressure required. Minimum pipe size for new water lines that supply or may be anticipated to supply fire hydrants shall be not less than six inches in diameter. Water line materials shall be approved by the responsible water supply entity.

6.35 LOCATION

a. Fire hydrants shall be attached to the distribution system at locations approved by the responsible fire protection agency and water supply entity providing service.

b. Fire hydrants should be located not closer than 50' to the building being protected unless a second hydrant is available as approved by the responsible fire department. (CCR T.14, Section 1275.15)

c. Fire hydrants installed after January 1, 1992, shall be located at a turnout or turnaround along the road or driveway so that fire apparatus using the hydrant will not block the roadway. (CCR T.14, Section 1275.15)

d. Turnouts shall be constructed in accordance with Figure FS-4. An exception to the turnout may be granted by the County Fire Warden when fire hydrants are located at intersections. (CCR T.14, Section 1273.06 / 1275.15)

6.36 MATERIALS AND HYDRANTS

a. Six inch fire hydrants shall conform to A.W.W.A. standards with one 4 ½" and two 2 ½" NST connections. All fire hydrants shall be a dry barrel type. Each hydrant shall be fitted with a 5 ¼" main valve opening and installed per Figure FS-2.

b. Fire hydrants shall be:

1. Mueller Centurion A-423
2. Kennedy Guardian K-81A
3. Waterous Pacer WB-67
   with oil reservoir
   bronze seat ring
   weather shield and one piece bronze nut
   mechanical attached nozzles

4. or equivalent, as approved by the respective water service and fire protection agency.

c. Each hydrant gate valve shall be supplied with an 8” valve box with metal cover, set to finish grade and installed to allow operation of gate valve per Figure FS-2.

d. All hydrants, valves, fittings, pipe, and installation shall be approved by the responsible fire protection agency and water supply entity providing service.

e. Protective barriers shall be provided when required by the respective fire department or water supply entity and shall be installed per Figure FS-3.

6.37 HYDRANT INSTALLATION

a. Fire hydrants shall be installed in accordance with Figure FS-2 and items 1 through 6 of Figure FS-1.

b. Hydrant installations are to be inspected in a timely manner by the responsible water supply entity or fire agency prior to burial.

6.38 HYDRANT MAINTENANCE AND MARKING

a. It is essential that hydrants be in operable condition when they are needed; therefore, hydrant maintenance is an important part of these standards.

It is recommended that water and fire districts enter into an agreement to specify which maintenance tasks will be the responsibility of each respective district.

b. A written record of hydrant inspections and maintenance should be maintained.

c. The following hydrant maintenance schedule is recommended:

2 year intervals

- paint hydrant - taking care that paint does not interfere with valve stem operation or cap removal

1 year interval

- flush and flow-test hydrant

6 month interval

- check for leaks in valves and repair
- operate and check street valve
- lubricate valve stem
- lubricate threads on outlets and caps

d. Marking – public hydrant barrels should be painted chrome yellow in color; private hydrant barrels should be painted red in color.

e. Hydrants installed after January 1, 1992, shall be identified by reflectorized blue markers. (CCR T.14, Section 1275.20)

1. On paved roadways located below 2,000 foot elevation, reflectorized blue markers shall be installed in accordance with the State Fire Marshal's Guidelines for Fire Hydrant Markings along State Highways and Freeways, May 1988. See Figure FS-7;

or

Hydrants shall be identified by a reflectorized blue dot (minimum (3) three inch diameter) mounted on a metal post located within three (3) feet of the hydrant. The blue dot shall be three (3) feet to five (5) feet above ground level and clearly visible from the road/driveway. (CCR T.14, Section 1275.20)

2. Along paved roads located at or above the 2,000 foot elevation, and along unpaved roads or driveways, hydrants shall be identified by a reflectorized blue marker on a metal post as specified above. (CCR T.14, Section 1275.20)

f. Flammable vegetation shall be cleared within eight (8) feet of fire hydrants. (CCR T.14, Section 1275.15)

g. Landscaping over four (4) inches in height shall not be permitted within eight (8) feet of fire hydrants.

h. Fences, structures, obstructions, and hydrant protection posts shall not be permitted within three (3) feet of fire hydrants.

6.4 FIRE PROTECTION WATER STANDARDS

No Central Water System

The following standards shall apply for new developments within areas without a central water distribution facility (either public or private) as described in Section 6.3a.

6.41 DEVELOPMENT WITHING A WATER AGENCY SPHERE OF INFLUENCE

Developments within the sphere of influence of a public water agency or adjacent to a private water system (as described in Section 6.3) may be required to connect to the water system and to meet the requirements of Section 6.3. The respective Fire District and water supply entity shall make recommendations to the Planning Commission or other appropriate board as to whether or not connection to the water system should be required.

6.42 RESIDENTIAL REQUIREMENTS

a. Each project shall be analyzed for individual requirements by the responsible fire department. Single-family residences outside the boundaries of a public or private water system will normally have water supplied by a fire department water tender. (CCR T.14, Section 1275.10).

b. Land divisions that create parcels less than two acres in size shall construct a central water system meeting the requirements listed in Section 6.3.

c. Land divisions that create parcels less than five acres in size shall be located within five road miles of a fire station. Said fire station shall be recognized by the County Fire Warden as being capable of providing fire protection services to the lots being created.

d. If usable and reliable water supplies exist on site, the responsible fire department may require access to such supplies. Access may be either an all-weather road for direct drafting or a gravity flow minimum 3” feeder line with 2 ½” NST gated valve outlet. Examples of water supplies are swimming pools, ponds, lakes, creeks, streams, irrigation ditches, etc.

6.43 FIRE FLOW - COMMERCIAL

a. Commercial, industrial, multiple residential (4 units or more) and public assemblies shall develop a private water system that meets the Insurance Services Office Schedule for Needed Fire Flow, June 1980 Edition;

or

Shall participate in a public entity that has plans for developing a water system to provide the needed fire flows. Said plans shall be approved by the County Fire Warden or his representative.

b. On projects where minimum fire flow, hydrant size or spacing cannot be achieved, the Fire Warden may, where reasonable fire protection can otherwise be supplied, approve reduced fire flows, hydrant size or increase spacing if alternate facilities or construction methods can be provided to assure reasonable fire protection.

6.5 BUILDING CONSTRUCTION STANDARDS

6.51 BUILDING SETBACKS

All buildings and accessory buildings constructed on parcels one acre or larger in size shall be setback a minimum of thirty (30) feet from all property lines and road easements. (CCR T.14, Section 1276.01)

6.52 ROOFING

Roofing materials on buildings and accessory buildings constructed within Shasta County shall have a Class “A” or Class “B” fire retardancy rating as specified by California Building Code.

6.53 CHIMNEY

Each structure equipped with a fireplace, stove, or other device that burns any solid or liquid fuel shall provide and maintain a spark arrester over the outlet of the chimney, stovepipe or duct as specified in this section (Public Resources Code 4291).

A spark arrester is defined as a device constructed of nonflammable material, 12 gauge minimum welded or woven wire mesh, with ½ inch openings or cast iron plate, 3/16 inch minimum thickness or other material found satisfactory by the enforcement agency and having ½ inch perforations for arresting burning carbon or sparks installed in such a manner as to be visible for the purposes of inspection and maintenance as required by Title 24, California Administrative Code, Section 2-1217.

6.54 RAFTERS

The spaces between rafters, the wall plate line and the underside of the roof sheathing shall be filled with solid blocking. No more ventilation than the minimum required by California Building Code shall be allowed. All vent spacing’s required by California Building Code shall be screened.

6.6 FUEL MODIFICATION

6.61 DISPOSAL OF VEGETATION

Disposal, including chipping, burning or removal to a landfill site approved by the local jurisdiction, of flammable vegetation and fuels removed during or caused by site development and/or construction, road and driveway construction, or fuel modification, shall be completed prior to recording the map for land divisions or final inspection for building permits. Disposal of vegetation by onsite burial is not permitted. (CCR T.14, Section 1276.02)

6.62 GREENBELTS

Subdivisions and other developments, which propose greenbelts such as parks, golf courses, irrigated landscaped areas, playgrounds, parking lots, orchards, etc. as a part of the development plan, shall locate said greenbelts strategically to provide a separation between wildland fuels and structures. The location of greenbelts shall be approved by the County Fire Warden and may be consistent with the CAL FIRE Shasta-Trinity Unit Fire Management Plan. (CCR T.14, Section 1276.03)

6.63 VEGETATION CLEANANCES AROUND STRUCTURES

Combustible vegetation shall be cleared around all structures for a distance of not less than 30 feet on each side; or to the property line. This does not apply to specimen trees or irrigated landscaping that will not transmit fire from the native vegetation to the structure. (Public Resources Code Section 4291)

6.7 FLAMMABLE AND COMBUSTIBLE LIQUIDS

6.71 ABOVEGROUND STORAGE TANKS FOR MOTOR VEHICLE FUEL – DISPENSING STATIONS

a. Except as provided in Sections 6.72 and 6.73, flammable and combustible liquid storage tanks at motor vehicle fuel-dispensing stations shall be located in accordance with divisions VI and IX of Article 79 of the California Fire Code as adopted by the County of Shasta.

b. The County Fire Warden and his/her designees may grant approval in writing for the installation of aboveground storage tanks for flammable and/or combustible fuels for motor vehicle fuel-dispensing stations as set forth in Sections 6.72 and 6.73.

c. Fuel-dispensing stations shall obtain any required permits or clearances from the Shasta County Planning Division.

d. Prior to operation of a fuel-dispensing station, an approved Hazardous Material Business Plan shall be filed with the Shasta County Division of Environmental Health.

e. Storage of over 600 gallons requires notification to State Water Resource Control Board.

6.72 VAULTED TANKS OF CONCRETE OR EQUIVALENT

a. Vaulted tanks may be located at commercial, industrial, governmental, or manufacturing establishments and are only intended for fueling vehicles used in connection with the business.

b. Class I and Class II liquids (such as diesel and gasoline) may be dispensed into motor vehicles from listed and approved concrete-vaulted tanks or tanks providing equivalent fire protection of not less than two hours on all tank surfaces. Tanks shall have UL Listing Label attached.

c. Tanks shall not exceed 2,000 gallons individual or aggregate capacity, except for Class II liquids installed in accordance with Section 6.73 and/or exceptions processed in accordance with Section 6.91 through 6.94.

d. Tanks shall be located a minimum of fifteen (15) feet from all property lines and fifteen (15) feet from any buildings on the same property.

e. Vaulted Tanks shall be provided with automatic fuel shut-off devices capable of stopping the delivery of fuel when the level in the tank reaches 90 percent of tank capacity.

f. Warning and identification signs shall be clearly posted on the tank in accordance with the current edition of the California Fire Code. Signs shall identify tank contents and flammability; prohibit smoking and open flames within 25 feet; and require vehicle motors to be stopped when fueling.

g. Protection posts shall be installed in accordance with Figure FS-3 to safeguard the tank against damage from vehicles.

h. Dispensing systems shall be in accordance with the current edition of the California Fire Code. Dispensing devices are allowed to be installed on top of vaulted tanks. Antisiphon devices shall be installed at each pipe connection when such piping extends below the top of the tank.

i. Venting and electrical controls, including emergency pump shut-off switch, shall be in accordance with the current edition of the California Fire Code. A permit shall be obtained from the Building Division for all electrical work.

j. A fire extinguisher with a minimum 2-A, 20B:C rating shall be provided within 75 feet walking distance of the vaulted tank and dispensing area at a location approved by the fire agency having jurisdiction.

k. Simultaneous tank filling and fuel dispensing into motor vehicles is prohibited and signs shall be posted to this effect.

l. The vaulted-tank area and dispensing area shall be graded in such a manner that any fuel spilled will not drain towards buildings or other exposures.

6.73 ABOVEGROUND STORAGE TANKS WITHOUT VAULTS

a. Aboveground tanks may be located at commercial, industrial, governmental, or manufacturing establishments and are only intended for fueling vehicles used in connection with the business and/or as otherwise permitted by Article 79 of the current edition of the California Fire Code.

b. Aboveground tanks without vaults may only be located in the following zone districts and/or as otherwise permitted by Article 79 of the current edition of the California Fire Code:

1. Exclusive Agriculture (EA) District
2. Timber Production (TP) District
3. Timberland (TL) District
4. Mineral Resource (MR) District
5. Light Industrial (M-L) District
6. General Industrial (M) District
7. Public Facilities (PF) District

c. Only Class II fuels (such as diesel) may be dispensed into motor vehicles from approved or listed aboveground tanks without vaults. Class I fuels (such as gasoline) shall be dispensed from underground tanks special enclosures, or vaulted tanks as specified in Section 6.72 and the current edition of the California Fire Code.

d. Aboveground tanks shall have a maximum individual capacity of 12,000 gallons and a maximum aggregate capacity of 24,000 gallons.

e. Tanks shall be located a minimum of:

1. 100 feet from any property line.

2. 50 feet from the nearest side of the edge of a road, not including internal driveways on the parcel.

3. 50 feet from any building on the same property.

4. 50 feet from any fuel dispenser.

f. Only tanks that are designed, and approved or listed for aboveground storage of Class II combustible liquids shall be used. Underground tanks shall not be installed for aboveground use.

g. The area surrounding the tank(s) shall be provided with a concrete and/or solid masonry-diked area with a concrete floor. The volumetric capacity of the diked area shall not be less than 115 percent of the amount of Class II fuel stored within the diked area. Walls of diked areas shall not exceed six (6) feet above the interior grade. Walls shall be designed and certified by a licensed engineer to be liquid-tight and to withstand a full hydrostatic head. The concrete floor of the diked area shall slope away from the tanks towards the walls of the dike. Diked areas containing two or more tanks shall be subdivided by channels or intermediate dikes. Provisions shall be made for draining or removing water from diked areas in a manner that will protect the environment and not constitute a hazard. Water removal by a sump and pump is preferred; however, drainage by a valve which is operable from outside the dike is acceptable. Such a valve shall be kept locked in the closed position except when water is being drained from the diked area.

h. A means shall be provided for determining the liquid level in each tank and this means shall be accessible to the delivery operator. Provisions shall be made either to automatically stop delivery of liquid to the tank when the liquid level in the tank reaches 98 percent of capacity or to sound an audible alarm when the liquid level in the tank reaches 95 percent of capacity.

i. Class II liquids shall not be dispensed from the tank by gravity flow or by pressurization of the tank. An antisiphon device shall be installed to prevent the release of fuel by siphon flow. A solenoid valve may be required at the tank outlet when the tank elevation produces a gravity head.

j. If a submersible pump system is used, a listed emergency shut-off valve shall be installed at each dispensing device. If a suction pump-type dispensing device is used, a listed vacuum-activated shut-off valve with a shear section or equivalent-type valve shall be installed directly under each dispensing device.

k. Piping shall be protected from physical damage. Piping subject to external corrosion shall be protected by approved or listed corrosion-resistant materials such as fiberglass reinforced plastic.

l. Tanks shall be protected from unauthorized entry either by chain-link fence at least six (6) feet high around the tank or around the perimeter of the yard area.

m. Diked areas shall be kept free of vegetation and combustible materials.

n. The delivery connection shall be located within the diked area. A check valve and shut-off valve with a quick-connect coupling or a dry-break valve shall be installed at the connection and disconnection location for tank filling.

o. Tanks and dispensing areas shall be clearly posted with warning and identification signs in accordance with the current edition of the California Fire Code.

p. The remote fuel dispensing system shall be protected against physical damage by a six (6) inch high concrete curb or protection posts installed in accordance with Figure FS-3.

q. Venting and electrical controls including the emergency pump shut-off switch shall be in accordance with the current edition of the California Fire Code.

r. A permit shall be obtained from the Building Division for the tank foundations and all electrical work.

s. A fire extinguisher with a minimum 2-A:20-B:C rating shall be provided within 75 feet walking distance of the diked-tank area and the dispensing area at a location approved by the fire agency having jurisdiction.

t. Plans for the motor vehicle fuel dispensing facility and the aboveground tank installation shall be submitted to the County Fire Warden or fire agency having jurisdiction for review and approval prior to any construction.

6.8 (Reserved for future additions to Standards.)

6.9 POLICIES AND STANDARDS; EXCEPTIONS; APPEALS

6.91 POLICIES AND STANDARDS NOT A LIMITATION

The policies and standards established by this chapter are not a limitation upon the powers of an approving authority to protect public health and safety and to ensure consistency between the projects and all elements of the General Plan, all other applicable laws, policies and standards of Shasta County, and all applicable state and federal laws and standards. The approving authority by 4/5 vote or greater may, with appropriate findings, grant an exception to the design and construction standards for an individual project in order to avoid physical obstructions which are extremely difficult or impossible to remove; to avoid irreparable damage to natural features; and to handle similar situations which are unforeseen by these standards. Exceptions from the generally applicable Standards shall result in the same practical effect of the general standards by meeting the performance criteria listed in Section 6.92.
(CCR T.14, Section 1270.07)

6.92 CRITERIA FOR EXCEPTIONS AND APPEALS

a. The approving authority shall apply the following criteria when granting exceptions or appeals:

1. Exceptions shall provide defensible space consistent with the “SRA Fire Safe Regulations.” (CCR T.14, Section 1270.09)

2. Exceptions shall provide safe emergency access for fire equipment.

3. Exceptions shall provide for unobstructed traffic circulation during an emergency.

4. Exceptions shall provide for safe civilian evacuation during an emergency.

5. Exceptions shall not cause delays in emergency response or interfere with the ability of emergency personnel to locate an incident.

6. Exceptions shall provide a sufficient quantity of water for both wildfire and structural fire fighting at a location where it is immediately available to emergency personnel.

7. Exceptions shall not result in fuel modification that would adversely affect access or defensible space thereby jeopardizing civilian and firefighter safety.

b. The approving authority shall consider recommendations from the County Fire Warden and/or the fire agency having jurisdiction in the exception or appeals process. The County Fire Warden and/or fire agency having jurisdiction shall provide documentation outlining the effects of the requested exception on fire protection services.

c. The approving authority shall make a written statement of findings as to the reason for the decision. A copy shall be provided to the applicant and the County Fire Warden.

6.93 EXCEPTIONS

a. Requests for exceptions shall be made in writing to the County Fire Warden by the applicant or the applicant's authorized representative. Requests shall state the specific section(s) for which an exception is requested, material facts supporting or justifying the exception, and proposed alternative mitigation measures. (CCR T.14, Section 1270.08)

b. For projects or permits under the jurisdiction of the Planning Division, the County Fire Warden will forward requests for exceptions to the Planning Commission or Board of Administrative Review along with his or her recommendations. The Planning Commission or Board of Administrative Review may grant or deny an exception in accordance with Section 6.92. A request for exception on a project subject to an administrative permit may, at the discretion of the Director of Resource Management, be referred to the County Fire Warden for approval or denial of the exception in accordance with Section 6.92.

c. For permits under the jurisdiction of the Building Division, the County Fire Warden may grant or deny the exception in accordance with Section 6.92.

6.94 APPEALS (CCR T.14, Section 1270.07)

a. Where an exception is not granted by the approving authority, appeals shall be processed in the manner provided for in the Shasta County Code. Planning Commission or Board of Administrative Review appeals shall be processed in accordance with Section 15.08.140. Building permit appeals shall be processed in accordance with Section 16.04.080.

b. Upon appeal, the Board of Building Appeals may grant or deny an exception in accordance with Section 6.92.

c. Upon appeal, the Board of Supervisors may grant or deny an exception in accordance with Section 6.92.

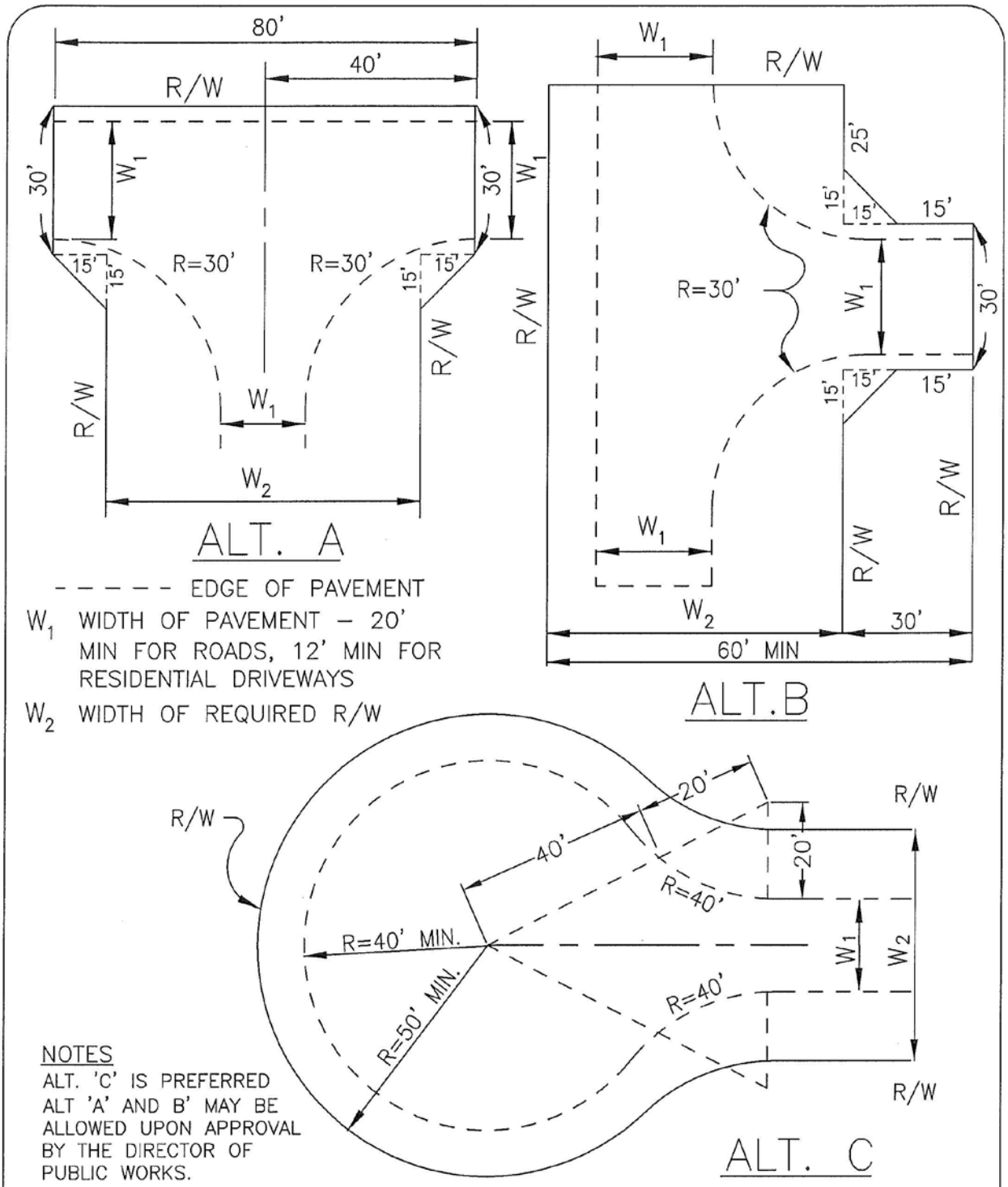

SCALE: NTS	DATE: 1996	SHASTA COUNTY DEPARTMENT OF PUBLIC WORKS	
DWG No. 13	DATE: 2015	APPROVED BY:	TURNAROUND ALTERNATES FOR RURAL GENERAL PLAN DESIGNATIONS
Fig 2–40	REVISION		

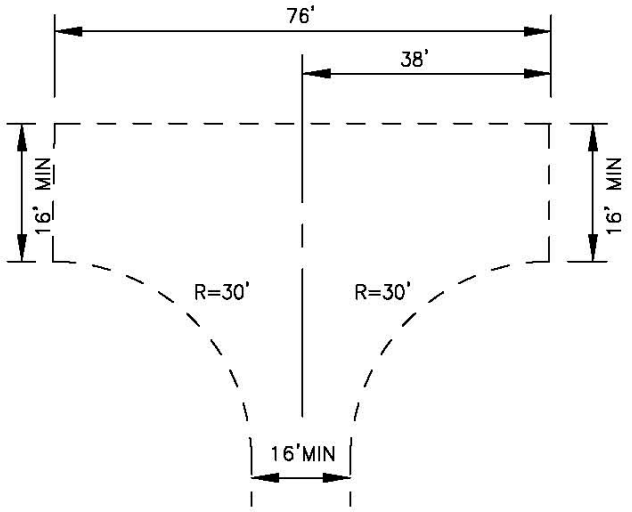

ALT. A

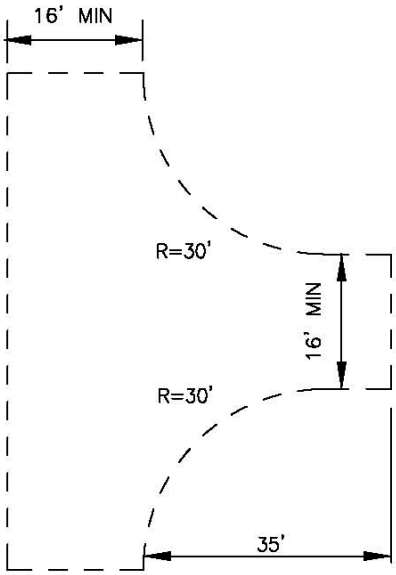

ALT.B

— — — — BOUNDARY OF CLEARED AND LEVELED AREA

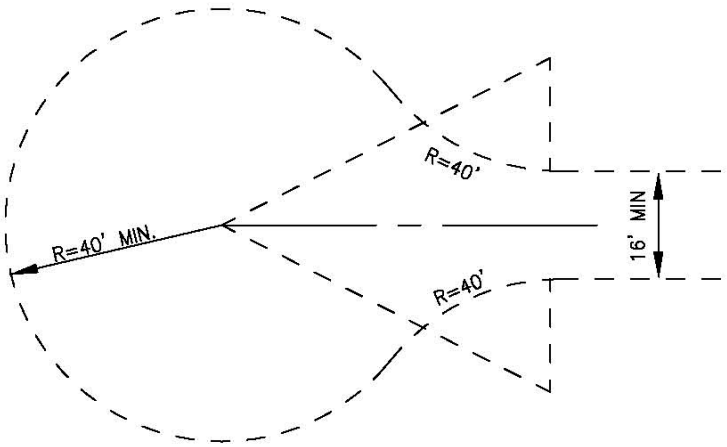

ALT. C

SCALE: NTS	DATE: 1996	SHASTA COUNTY DEPARTMENT OF PUBLIC WORKS	
	DATE: 2015	APPROVED BY: _____	MINIMUM FIRE STANDARD TURNAROUND ALTERNATES (FOR RESIDENTIAL DRIVEWAYS OVER 300 FEET IN LENGTH)
Fig 2–42	REVISION		

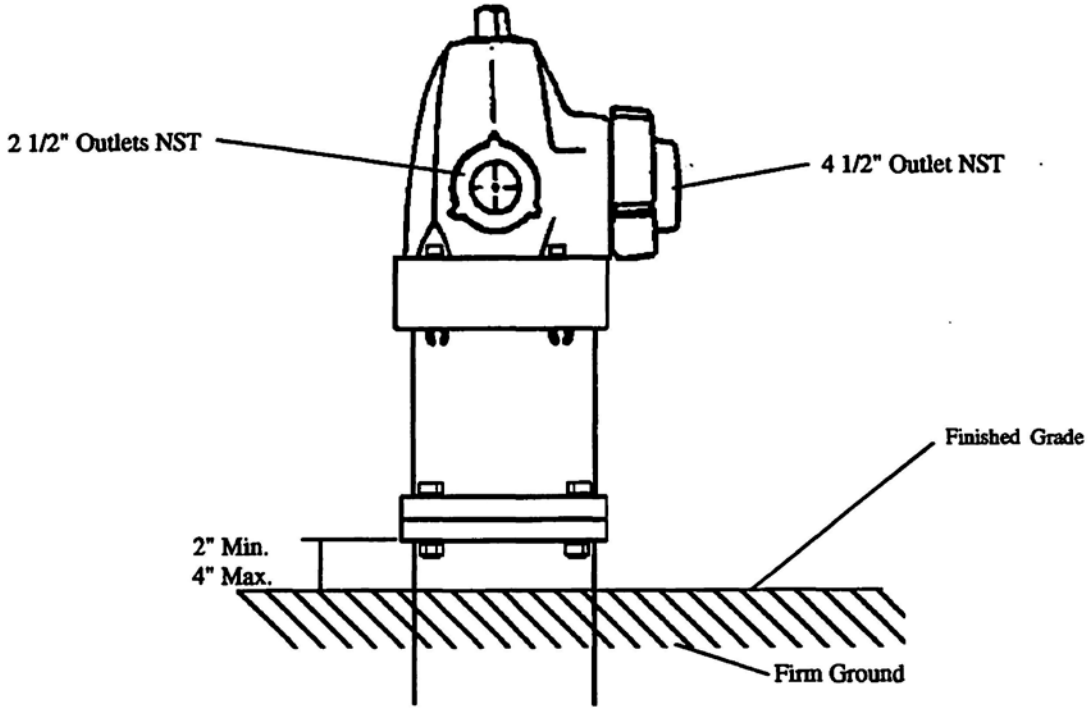

NOTES:

(1) Each hydrant must be gated between the hydrant and street main.

(2) Each hydrant shall be placed in such a manner that the 4 1/2 inch outlet faces the street.

(3) Fire hydrants shall be placed a minimum of 4 feet and maximum of 10 feet from the edge of the road surface or turnout, or as otherwise approved by the respective fire district and water service entity.

(4) Barrel must be of dry type.

(5) Hose threads on outlets shall be National Standard dimensions.

(6) Hydrants shall NOT be less than 18 inches or more than 25 inches above the grade of the roadway or driveway.

STATE OF CALIFORNIA
COUNTY OF SHASTA
FIRE DEPARTMENT

MINIMUM FIRE STANDARD
FIRE HYDRANT
DRY BARREL TYPE

Fig. FS-1

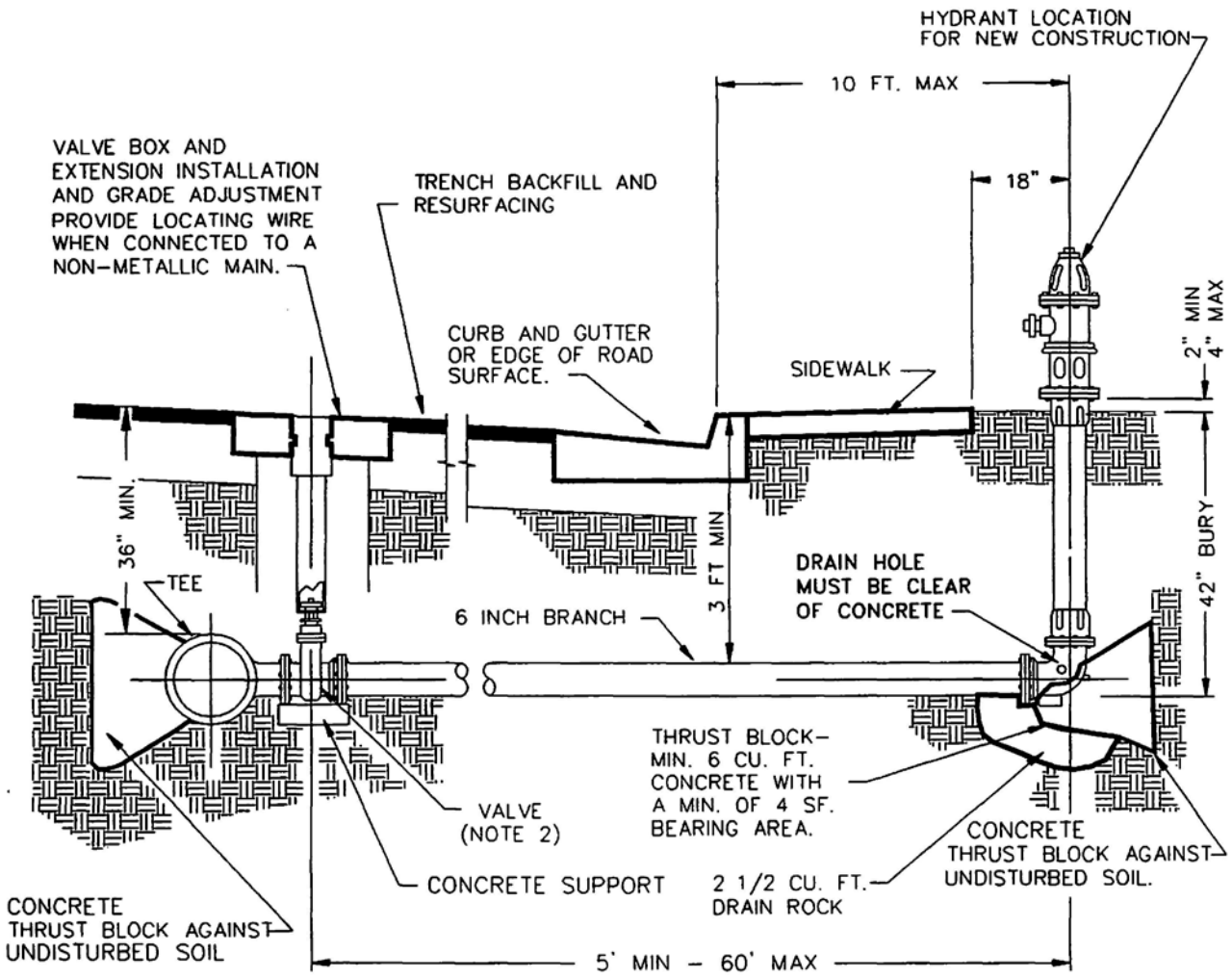

NOTES:

1. ALL CONSTRUCTION SHALL BE INSPECTED BY THE RESPONSIBLE AGENCY PRIOR TO BURIAL.
2. FOR ALLOWABLE FIRE HYDRANTS, VALVES, PIPE AND FITTINGS SEE SECTION 5.36. (GATE VALVE ACCORDING TO A.W.W.A. STANDARDS)
3. HYDRANT BURY DEPTH MAY VARY WITH PRIOR APPROVAL OF THE WATER SERVICE ENTITY.
4. PRIVATE ON-SITE HYDRANT LOCATIONS TO BE APPROVED BY THE FIRE AGENCY HAVING JURISDICTION.

STATE OF CALIFORNIA
COUNTY OF SHASTA
FIRE DEPARTMENT

FIRE HYDRANT INSTALLATION

Fig. FS-2

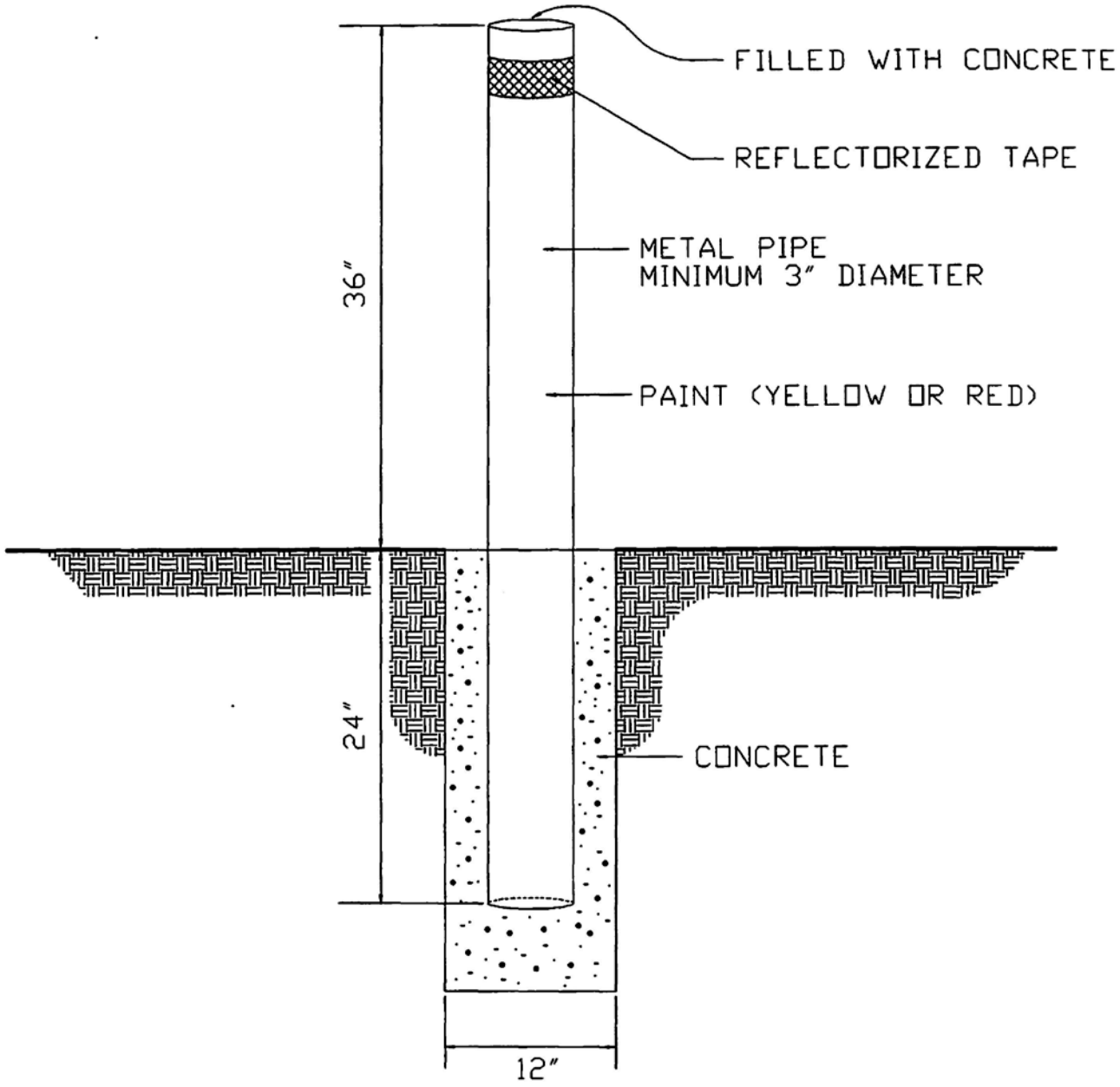

*** NOT FOR USE ON PUBLIC OR PRIVATE ROADWAYS

FOR USE ON PRIVATE PROPERTY ONLY

STATE OF CALIFORNIA
COUNTY OF SHASTA
FIRE DEPARTMENT

MINIMUM FIRE STANDARD
HYDRANT
PROTECTION POST

Fig. FS-3

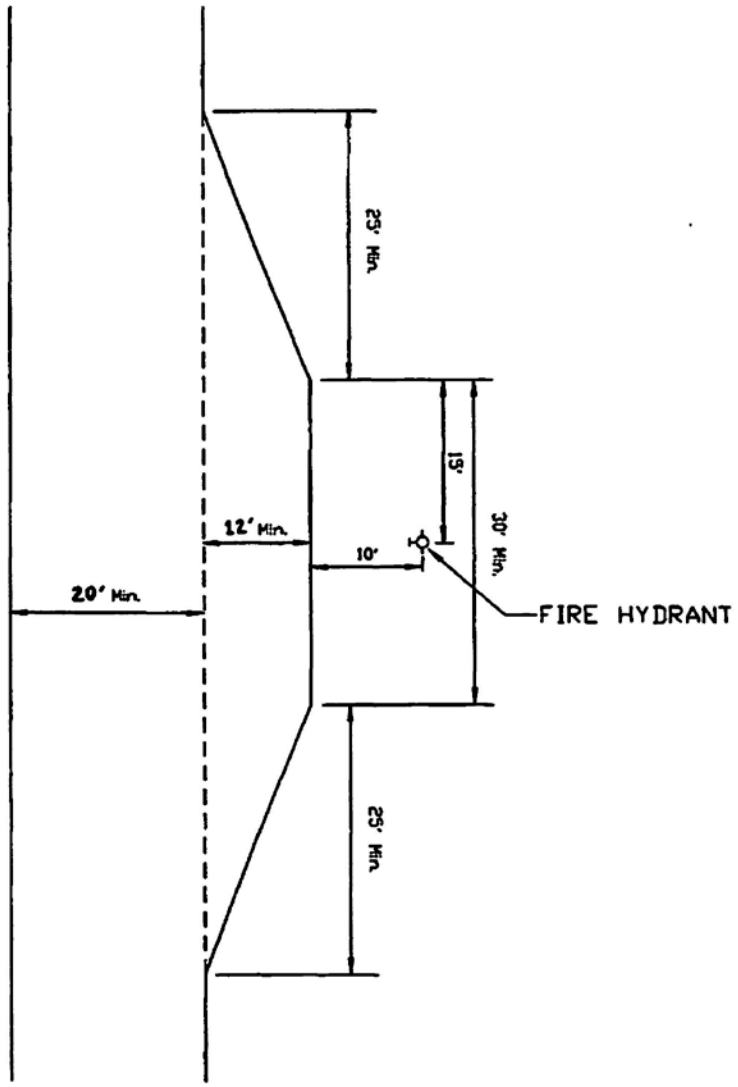

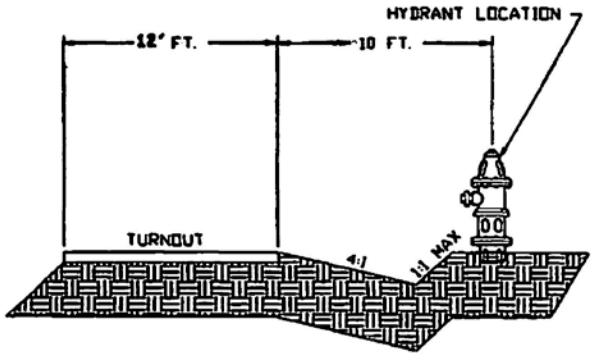

STATE OF CALIFORNIA
COUNTY OF SHASTA
FIRE DEPARTMENT

TURNOUT
FOR FIRE HYDRANTS

Fig. FS-4

*** NOT DRAWN TO SCALE

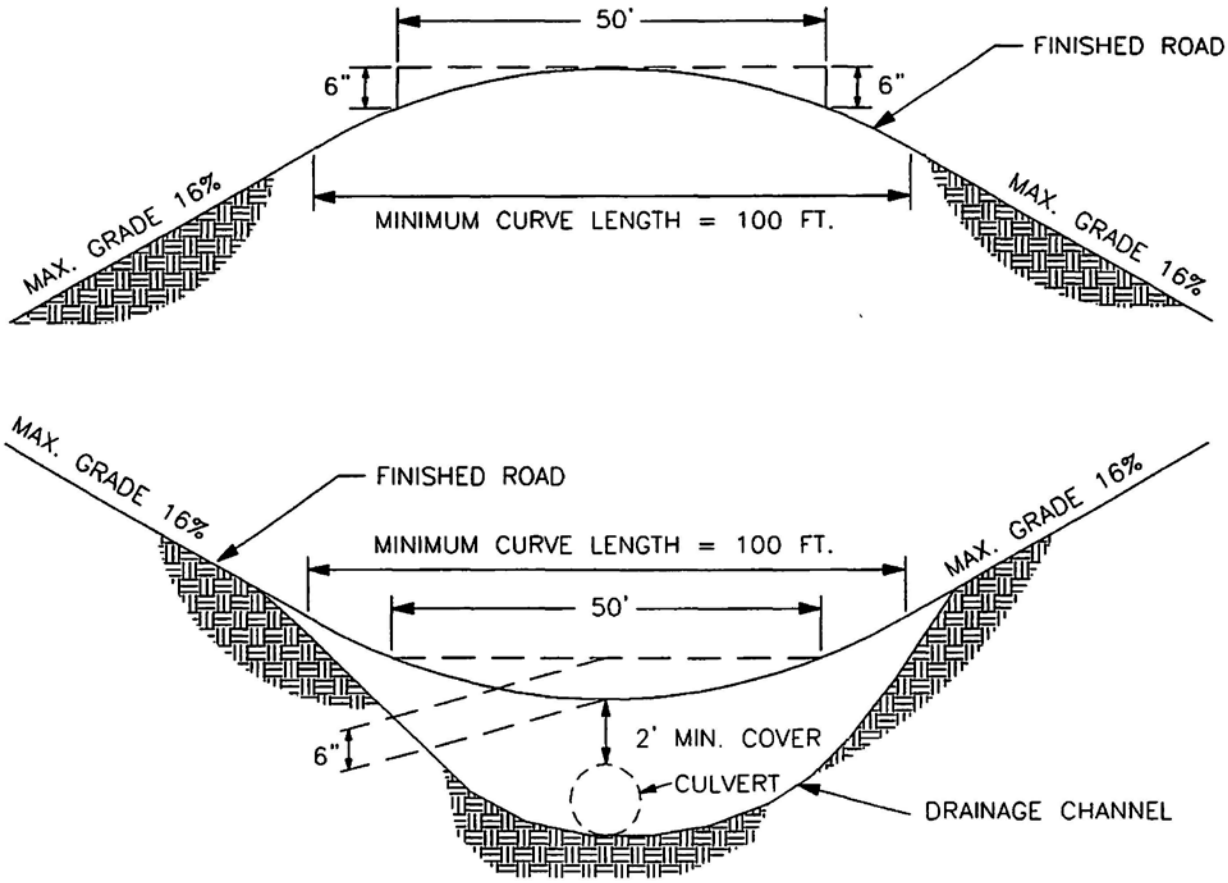

NOTES:

1. Culvert size to be established by a licensed Engineer.
2. Culverts should have a minimum depth of 24" of cover or an amount equal to 1/2 of the diameter of the culvert, whichever is greater.
3. Contact the Shasta County Building Division to determine whether a grading permit is required.
4. Contact the California Department of Fish and Game prior to grading within creeks and drainages.

STATE OF CALIFORNIA
COUNTY OF SHASTA
FIRE DEPARTMENT

TYPICAL VERTICAL CURVES

FOR PRIVATE RESIDENTIAL DRIVEWAYS

Fig. FS-5

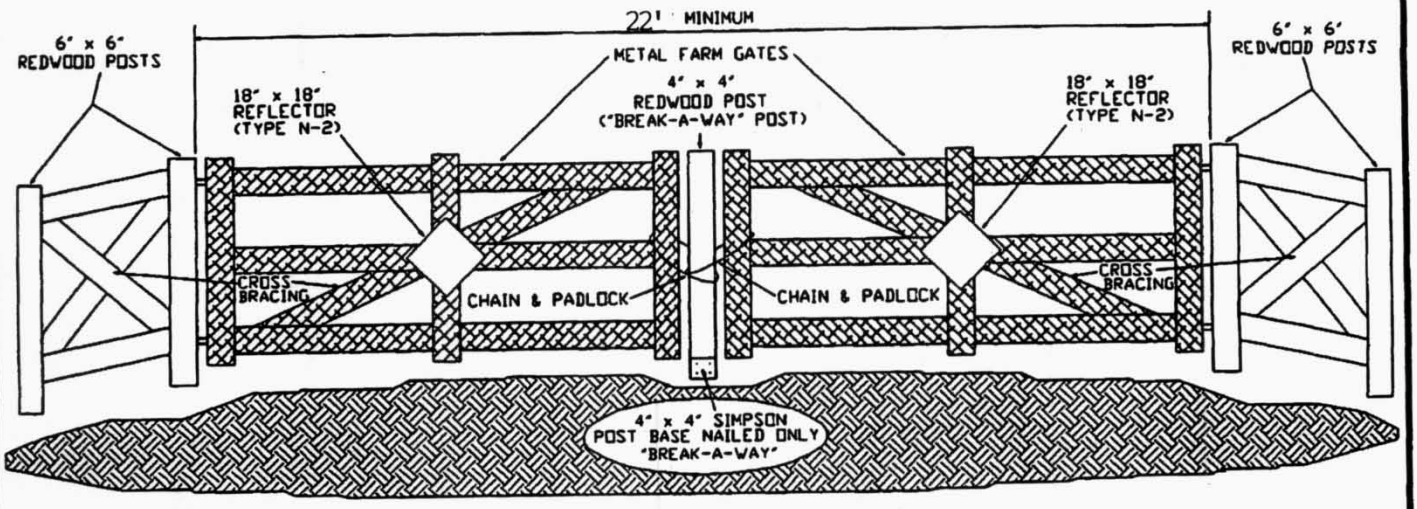

*** NOTES: 1) All exposed surfaces to be painted with 2 coats of white exterior grade paint.

2) Set all posts in 3' of concrete.

3) 2 SEPARATE CHAINS AND PADLOCKS, ONE SET FOR EACH GATE

STATE OF CALIFORNIA
COUNTY OF SHASTA
FIRE DEPARTMENT

BREAK-A-WAY
GATE ASSEMBLY

Fig. FS-6

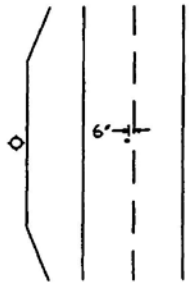

FIGURE 1
TWO LANE STREET

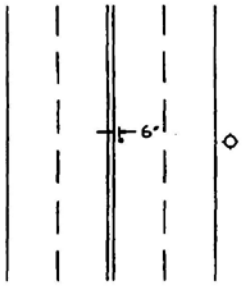

FIGURE 2
MULTI-LANE STREET

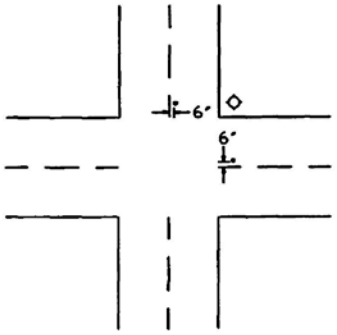

FIGURE 3
AN INTERSECTION

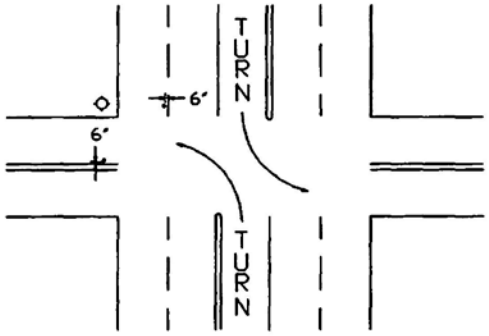

FIGURE 4
FOUR LANE STREET WITH
TURN LANE AT INTERSECTION

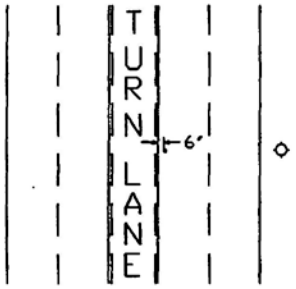

FIGURE 5
MULTI-LANE STREET
WITH TURN LANE

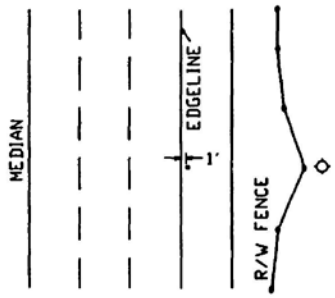

FIGURE 6
FREEWAYS AND EXPRESSWAYS

◇ = FIRE HYDRANT

· = BLUE PAVEMENT MARKER

NOTE: REFLECTIVE SURFACE OF BLUE DOT TO FACE DIRECTION OF VEHICLE TRAVEL

STATE OF CALIFORNIA

COUNTY OF SHASTA
FIRE DEPARTMENT

TYPICAL HYDRANT MARKER LOCATION

Fig. FS-7

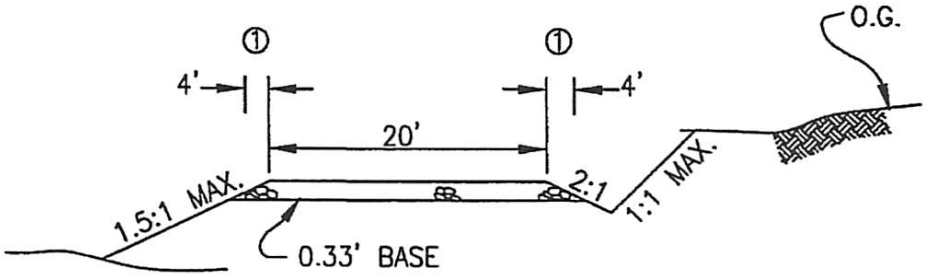

PRD EMERGENCY FIRE ESCAPE ROAD

① VEGETATION CLEAR ZONE, REMOVE VEGETATION SMALLER THAN 6–INCH IN DIAMETER A MINIMUM OF 4 FEET BEYOND THE EDGE OF ROAD

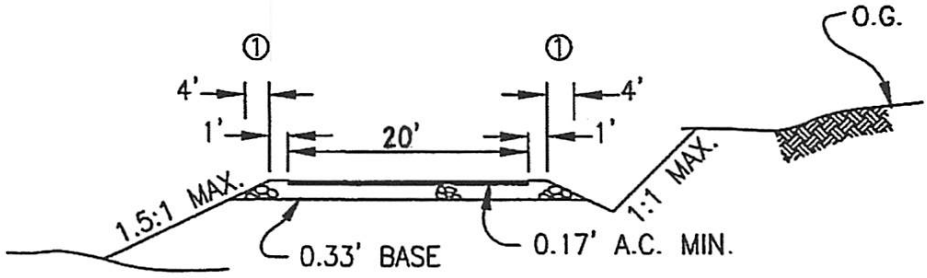

PAVED EMERGENCY FIRE ESCAPE ROAD

① VEGETATION CLEAR ZONE, REMOVE VEGETATION SMALLER THAN 6–INCH IN DIAMETER A MINIMUM OF 4 FEET BEYOND THE EDGE OF ROAD

TYPICAL SECTIONS

SCALE: NTS	DATE: 08–2004	SHASTA COUNTY DEPARTMENT OF PUBLIC WORKS

TYPICAL SECTIONS FOR EMERGENCY FIRE ESCAPE ROAD

FS–8

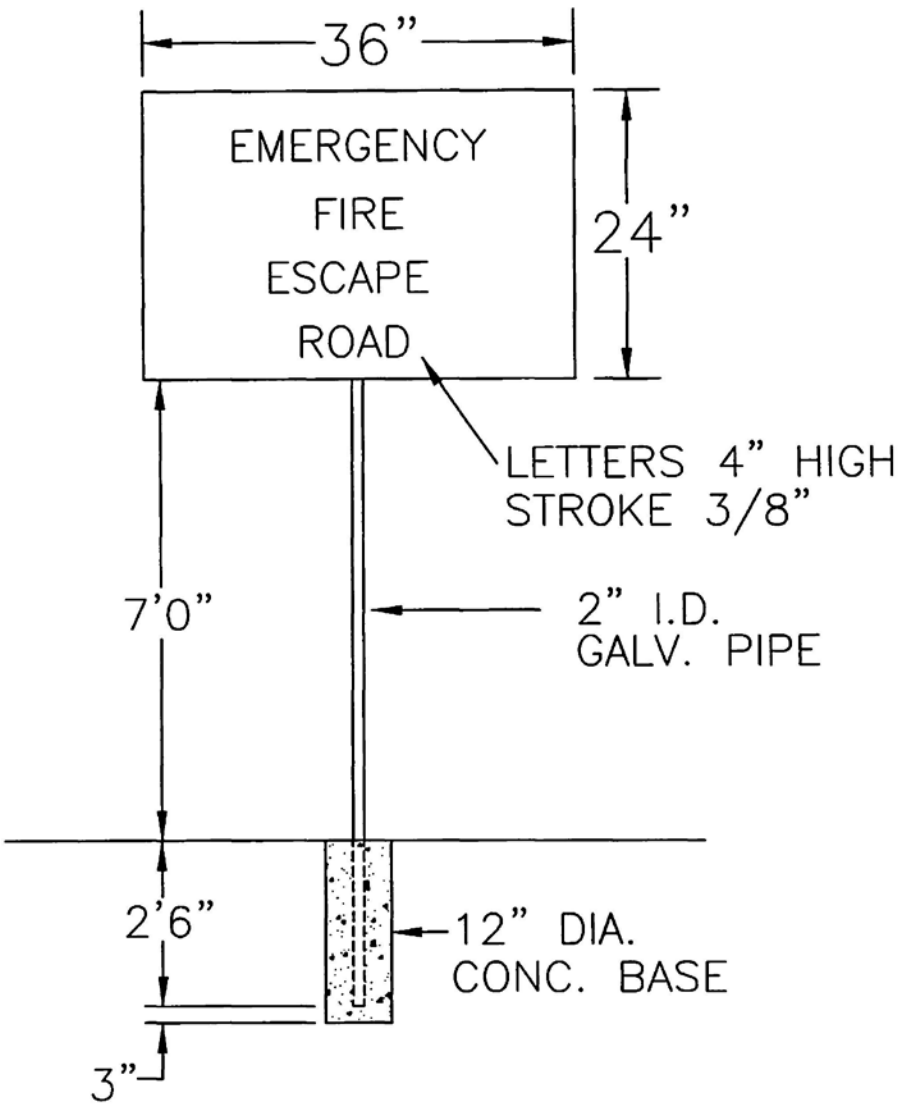

REFLECTIVE WHITE LETTERS ON
REFLECTIVE GREEN BACKGROUND

SCALE: NTS	DATE: 01–2003	SHASTA COUNTY DEPARTMENT OF PUBLIC WORKS

SIGN
FOR EMERGENCY FIRE ESCAPE ROAD

FS–9

CHAPTER 7

COUNTY SERVICE AREAS

SANITARY SEWER

AND

WATER SYSTEM STANDARDS

CHAPTER 7 - COUNTY SERVICE AREAS
SANITARY SEWER AND WATER SYSTEM STANDARDS

A. GENERAL PROVISIONS

1. General Requirements

a. All sanitary sewer and water system improvements to be accepted by a County Service Area (CSA) shall conform to the requirements as described herein, unless otherwise approved by the CSA.

b. In the event of any conflict between these CSA standards and other standards (e.g. Shasta County road standards), these CSA standards shall govern.

c. In the event that the subject CSA is not presently capable of providing the desired water/sewer service to the subject parcel, it shall be the responsibility of the applicant to make any necessary improvements to the CSA facilities necessary to serve the property. Such improvements may include extension of water and/or sewer lines, improvements to supply, treatment, storage and distribution facilities, and any additional facilities that may be required.

d. All necessary CSA facility improvements necessary to serve the customer shall be constructed at the sole expense of the customer. Said facilities shall meet or exceed minimum standards of design and construction of facilities, as required by the CSA and these Standards. Any deviations from these Standards shall be approved by the CSA and certified by a Civil Engineer registered in the State of California.

e. All plans and specifications for improvements to CSA facilities shall be prepared by a registered civil engineer and shall be submitted to the CSA for approval. Plans and specifications shall be approved by the CSA prior to the commencement of any related construction. Any construction that is to be accepted by a CSA shall be done by a licensed contractor.

f. Where reduced or increased pressure is desired by the customer, he/she shall be responsible for installing and maintaining the necessary regulators, pumps, and relief valves at their sole expense. Said facilities shall not be installed on the supply side of the meter without written approval of the CSA.

g. An encroachment permit shall be required for all work within the County rights of way.

h. In no event shall service laterals extend more than 60' into public rights of way unless otherwise approved by the CSA.

i. Where sanitary sewer or water mains are not aligned within County rights of way, a 20-foot minimum width easement shall be provided to the CSA, with terms approved by the CSA. Easements shall allow ingress and egress by maintenance personnel, vehicles and heavy equipment for the purposes of inspecting, maintaining and repairing CSA facilities. In addition, an all-weather

gravel road, 12-foot minimum width, shall be provided to all blowoffs, hydrants, air valves, manholes and similar facilities.

2. Acceptance and Ownership

   a. Prior to acceptance of sanitary sewer or water system improvements, the applicant shall submit, to the CSA, as-built plans, a certificate of completion, and all other items specified by the CSA and shall pay all inspection, capital improvement, connection fees and other charges as established by the CSA and the County.

   b. Prior to acceptance of any sanitary sewer or water system improvements, all facilities to be operated and maintained by a CSA shall be dedicated to the CSA, along with all related rights of way and easements. The CSA shall assume ownership of all water service facilities through the meter, including the meter box and cover. All facilities past the outlet side of the meter shall remain the property of the customer, and the maintenance and repair of the facilities shall be the responsibility of the customer. Likewise, the CSA will assume ownership for all sewer facilities to the property line, including the cleanout. All sewer facilities past the property line shall remain the property of the customer, and the maintenance and repair of the facilities shall be the responsibility of the customer. The CSA shall assume no responsibility for facilities they do not accept. Maintenance, repair and operation of all non-accepted facilities shall remain the responsibility of the owner and the CSA shall assume no obligations thereto.

   c. An agreement shall be executed by the applicant guaranteeing all dedicated facilities for a period of one year after acceptance by the CSA against defects in design, materials and workmanship. The agreement shall require a bond in the amount of seventy-five percent of the estimated construction cost of the improvements, unless waived by the CSA.

3. Fees and Costs

   a. A deposit for the CSA to review and inspect a proposed community water or sewage disposal system will be required. This deposit shall be in accordance with the Fee Schedule for Plan Check and Inspection Deposit in Chapter 2 of these development standards. Should the water or sewer improvements be part of a subdivision or other development project, only one deposit will be required in accordance with the cost of the entire project.

   b. In addition, for annexations of existing facilities or formation of new districts fees shall be as set forth in Appendices 7-1 and 7-2.

4. Household Equivalents

   a. The household equivalents used for design purposes and to calculate sewer fees are listed in Table 7-1. As a minimum each parcel shall be assigned one household equivalent.

TABLE 7-1

SEWER HOUSEHOLD EQUIVALENTS

NO.	COMMERCIAL, RESIDENTIAL, AND SPECIAL GROUPS	* HOUSEHOLD EQUIVALENT
1	Residential - Single Family & Duplex	1.0/Unit
2	Residential - Multiple Family, Apartment	.6/Unit
3	Residential Mobile Home	1.0/Unit
4	Mobile Home Park	.8/Space
5	Bakery - Wholesale	1.0/1000Ft²
6	Barber Shop	0.3/Chair
7	Bar w/o Dining Facilities	2.0/Establish
8	Beauty Shop	0.5/Chair
9	Car Wash - Self-service w/recycle	1.0/Bay
10	Church (schools not included)	0.2/1000Ft²
11	City, County, Federal Buildings	0.8/1000Ft²
12	Department and Retail Store	0.5/1000Ft²
13	Convalescent Home	0.5/Bed
14	Health Club	0.8/1000Ft²
15	Hospital	1.0/Bed
16	Industry, Light (dry)	0.1/1000Ft²
17	Laundromat	0.5/Washer
18	Laundry (Industrial)	Case by Case
19	Medical & Dental Office	1.0/1000Ft²
20	Motel Without Dining Facilities	0.5/Room 0.6 w/Kitchen
21	Mortuary	1.5/Slumber Room
22	Professional Office	0.8/1000Ft²
23	Recreational Hall	Case by Case
24	Repair Shop	.50/Stall
25	Restaurant: A. Large 24-hour Chain B. Large (> 2500 Ft²) C. Small (< 2500 Ft²) D. Pizza Parlor E. Fast Food Establishment: I. Major Chain II. Local	 4.6/1000Ft² 4.6/1000Ft² 4.6/1000Ft² 4.6/1000Ft² 4.6/1000Ft² 4.6/1000Ft²
26	School: A. Elementary B. Secondary (w/Showers)	 0.08/Student 0.10/Student
27	Service Station: A. With Convenience Store B. Highway Location - High Volume C. Other Location	 0.5/Pump 0.75/Pump 0.5/1000Ft²
28	Theater	0.02/Seat
29	Market: A. Supermarket (Chain Store Size) B. Small Convenience Market (no gas) C. Market w/o Garbage Disposal	 0.75/1000Ft² 0.5/1000Ft² 0.5/1000Ft²
30	Warehouse	Case by Case

* See Section B.3. "Flow Criteria"

b. Household equivalents for buildings that are undefined or intended for multiple types of occupancy shall be determined by the zoning as defined in the Shasta County Code. These household equivalents are given in Table 7-2.

TABLE 7-2

SEWER HOUSEHOLD EQUIVALENTS
FOR FACILITIES WITH UNDEFINED OR MULTIPLE OCCUPANCY TYPES

ZONE	DEFINITION PER SHASTA COUNTY CODE	* HOUSEHOLD EQUIVALENT
C-1	Local Convenience	1.3/1000Ft²
C-2	Community Commercial	2.0/1000Ft²
C-O	Office Commercial	1.3/1000Ft²
C-H	Highway Commercial	1.8/1000Ft²
C-R	Commercial Recreational	1.5/1000Ft²
C-M	Commercial Light Industrial	1.8/1000Ft²

* See Section B.3. "Flow Criteria"

5. Classifications

a. All single family dwellings, public schools, churches, and nonprofit organizations with water services not greater than 3/4 inch in diameter shall be classified as residential services. Any service greater than 3/4 inch in diameter shall be classified as commercial.

b. Upon approval of the CSA, motels, duplexes, apartment houses, mobile home parks, and other residential uses with multiple living units on a single parcel may be granted water service with a single meter.

6. Reimbursement to Developer

a. The CSA may require the oversizing of the improvements to provide additional capacity for the benefit of existing CSA customers, or for the future benefit of properties not presently served by the CSA. In the event that such oversized facilities are to be accepted by the CSA and dedicated to the public, the developer may request the CSA to administer a reimbursement agreement, persuant to Section 2.A.6. "Reimbursement to Developer" of the Shasta County Development Standards, for the costs of oversizing.

7. Policies And Standards Not a Limitation

a. The policies and standards established by this section are not a limitation upon the powers of an approving authority to protect public health and safety and to ensure consistency between the projects and all elements of the General Plan, all other applicable laws, policies and standards of Shasta County, the CSA, and all applicable state and federal laws and standards. The CSA may, with appropriate findings, deviate from the design or construction standards for an individual project in order to be consistent with adjacent or neighboring projects; to avoid physical obstructions which are extremely difficult or impossible to remove; to avoid irreparable damage to a natural feature; and to handle similar situations which are unforseen by these standards.

B. CSA SANITARY SEWER DESIGN AND CONSTRUCTION CRITERIA

1. General Requirements

a. Sewers shall meet the following design requirements except where specifically approved otherwise by the CSA. Any sewers installed within another utilities' LAFCO Sphere of Influence shall also meet that agency's standards, which shall govern in the event of conflict. All construction shall conform to latest edition of Standard Specifications for Public Works Construction (SS), unless modified herein.

2. Acceptable Materials

a. Trunks, mains, collectors, and sewer service connections (4" and larger) shall be PVC — solid wall SDR 35 per ASTM D-3034. Between a residential structure and the property line, laterals may be ABS conforming to ASTM D2751-83a.

3. Flow Criteria

a. Except for CSA #8, Palo Cedro, design of sewer lines within the Shasta County Service Areas shall be based upon an average daily flow of 250 gallons per household equivalent per day times a peaking factor (Figure S-1) plus 1,500 gallons per acre per day for stormwater and groundwater infiltration. The sewer lines in CSA #8 shall be based upon an average daily flow of 195 gallons per household equivalent per day times a peaking factor (Figure S-1) plus 1,500 gallons per acre per day for stormwater and groundwater infiltration.

4. Resistance Factor

a. Mains and collector sewer lines shall be designed with a minimum Manning coefficient of n = 0.013.

5. Minimum Slope

a. The minimum slope allowed for sewer lines shall be:

TABLE 7-3
MINIMUM ALLOWABLE SEWER LINE SLOPE

DIAMETER	NORMAL MINIMUM SLOPE	ABSOLUTE MINIMUM	NOTE
6"	0.0065	0.0052	Absolute minimum slopes for larger sewers shall be based on 2 feet per second flow when full.
8"	0.0040	0.0033	
10"	0.0030	0.0025	
12"	0.0025	0.0020	

b. Any dead end line with a length of 200 feet, or less, shall have a minimum slope of S = 0.0065.

6. Minimum Size

a. The minimum size sewer line shall be 6-inch, except 4-inch may be used for laterals for individual services. For mains which serve C, I or MU general plan land use areas the minimum size shall be 8-inch. Sewer mains serving over 100 connections shall be 8-inch minimum. Where master plans have been developed, the sewers shall be sized pursuant to such plans. When such plans are not available the sewer shall be sized on anticipated ultimate development in the tributary area.

7. Minimum Radius

a. The minimum allowable radius of curvature in the sewer lines shall be as shown in Table 7-4.

TABLE 7-4
MINIMUM RADIUS CURVES FOR SEWER LINES
(RADII IN FEET)

Based on 1½ times the manufacturers' recommended minimums	
DIAMETER	PVC SDR 35
6"	225
8"	300
10"	375
12"	450
15"	525

8. Minimum Cover

a. Minimum depth of cover shall be as follows:

(1) 5.0 feet over main line in street and 3.0 feet in cross country areas

(2). 4.5 feet to invert of service connections at property line unless otherwise approved by the CSA.

9. Manhole Spacing

a. Manhole spacing and locations shall be as follows:

(1)	Sewers 6- to 8-inch	:	400	feet maximum
(2)	Sewers 10- to 12-inch	:	500	feet maximum
(3)	Sewers 15-inch and larger	:	1,000	feet maximum

(4) At all angle points in horizontal and vertical alignment (except where vertical curves are permitted)
(5) At the terminal end of all lines (except where rodholes are permitted)
(6) At all connecting sewers

10. Drop Manholes

a. Drop manholes will not be permitted unless approved by the CSA.

11. Rodholes

a. Rodholes will only be allowed on a sewer less than 200 feet long, and when the line serves four or less connections.

12. Final Testing

a. Prior to acceptance of the sewer, the lines shall be tested for leakage, cleaned, flushed, balled, mandrelled and televised. Sewer extensions of less than 1,000 feet with no vertical curves between manholes are not required to be televised. All final testing discussed herein shall be considered to be part of the work and shall be performed at the expense of the applicant.

13. Plugging

a. The downstream end of all new lines shall be plugged until the sewer is accepted by the CSA. The plug will be removed by CSA personnel at the time the sewers are placed into operation.

14. Maximum Depth of Cover

a. Mains shall not be designed with cover exceeding 15 feet from finish surface grade, without special permission from the CSA.

15. Acceptable Depth for Service

    a. Sewer depth shall be such as to obtain gravity service to all potential building sites using a minimum building sewer grade of 1 percent (1/8-inch per foot) with the connecting service invert at the crown of the main sewer, and 18 inches to invert at the building site.

16. Crown Matching and Manhole Inverts

    a. Where pipe sizes increase, the crowns shall match in elevation and the manhole invert shall slope the diameter difference. On all manholes with other than straight through piping the manhole invert shall slope at least 0.17 foot.

17. Vertical Curves

    a. Vertical curves are permitted only when a straight grade is deemed impractical by the CSA.

18. Sewer/Water Main Separation

    a. Sewers shall normally be 10-foot minimum from water mains (clear dimensions). A 15-foot spacing between water and sewer, typically with sewer 5 feet to one side of road centerline, is required for urban construction . In rural areas water and sewer main lines shall be outside the pavement edge on opposite edges of the road and should not lie directly below any surface drainage ditches. Sewers shall be separated from water mains pursuant to State Health Department Standards when lesser spacing is necessary for practical construction.

19. Property Line Cleanouts

    a. Property line cleanouts shall be installed on laterals on all sewer systems.

20. Laterals Connecting at Manholes

    a. Laterals may enter directly into manholes providing the invert is at the grade of the crown of the exiting sewer.

21. No Service Connections to Force Mains

    a. Laterals shall not be connected to force mains.

22. No Joint Service Laterals

    a. Joint use of a single lateral by two property owners is not permitted.

23. Individual Pumping Systems

    a. Use of individual sewage pump stations or sewage pumps in combination with septic tanks will not be permitted unless approved by the CSA.

24. Plans

a. Sewer improvement plans shall be at 1"=100' or larger scale. A profile must be included. Ground elevations along the sewer, at lateral connection points, and at potential building sites, shall be based on field surveys or topographic maps prepared in accordance with National Mapping Standards with contour intervals of 2 feet or less. Bench mark data, north arrow, scale, street names, invert elevations, property and right of way lines, existing utilities, sewer grades, sewer locations, and special construction features shall be shown on the plans.

25. Inspection

a. All sewer construction shall be subject to inspection by the CSA. No work shall be performed without a minimum of five working days advance written notice to the CSA.

26. Compaction Testing

a. Where facilities are to be dedicated to the CSA, compaction tests shall be conducted by a California registered Civil Engineering or Geotechnical Engineering Company, or by an approved materials testing laboratory. Tests shall be taken at a minimum of every 1,000 feet, and no less than two per job, and two additional tests shall be performed for each failing test. Test locations shall be selected by the CSA's inspector. Compaction tests shall be done in compliance with California test methods 216 and 231.

C. WATER SYSTEM DESIGN AND CONSTRUCTION CRITERIA

1. General Requirements

a. Water systems shall meet the following design requirements except where specifically approved by the CSA. Any water system installed within another utilities' LAFCO Sphere of Influence shall also meet that agency's standards which shall also govern in the event of a conflict. All construction shall conform to latest edition of Standard Specifications for Public Works Construction (SS), unless modified herein and shall conform to Title 22, State of California Water Works Standards.

2. Pipe Material

a. Water main piping shall be either ductile iron pipe or PVC. Services 3" and larger shall be ductile iron, or Class 150 C900 PVC. Services less than 3" shall be copper, except services from 1 1/2 inches to 3 inches may be Schedule 80 PVC.

3. Pipe Size

a. All water main piping serving fire hydrants shall be 6-inch minimum.

b. Where master plans have been developed, the water main pipe size shall conform to the master plan. In the absence of a master plan, the pipe size shall be adequate to maintain a minimum pressure of 45 psi, and not cause the static pressure to drop more than 20 percent of normal under peak domestic demands at ultimate development. During fire flows, coincident with the maximum daily demand, residual pressures in the mains shall not fall below 20 psi.

c. When piping is needed only to accommodate service connections the size shall be large enough to have not more than 3 pounds per square inch of (psi) pressure loss when all services are operating at their maximum meter capacities. Minimum size shall be 2-inch.

4. Fire Hydrants

a. Fire hydrant type, spacing and installation details shall conform to the latest version of the Fire Safety Standards for Shasta County.

5. Blowoffs

a. Blowoffs shall be provided at all pronounced low points and on any main which dead ends more than 10 feet past a fire hydrant.

6. Requirements for Reduced Pressure Backflow Valves, Double Checks, And Detector Checks

a. Backflow prevention using approved devices to control cross connections shall be accomplished pursuant to the State of California, Title 17, Regulations Concerning Cross Connections. Backflow prevention devices shall be installed on private property, but as close to the water meter connection as practical, and at locations which are available for inspection by, CSA, County and Health Agencies personnel. Backflow devices shall conform to the attached standard details when applicable. For sizes and types of backflow preventers not shown in these standards, the details in the latest City of Redding standards shall be used.

b. Fire services may or may not require a backflow prevention device. Each such service shall be reviewed with respect to State of California Title 17, Assembly Bill 2503, and the memorandum from the State Fire Marshall's Office of December 10, 1984 regarding Cross Connection Control Requirements on Certain Classes of Fire Sprinkler Systems AB 2503.

7. Air Valves

a. Air valves shall be combination types installed on all high points in the distribution system, except when an active service connection can be placed at the high point and there is no reason for air to accumulate at that high point other than during construction, repair, or total system pressure loss. An air

valve shall always be placed at the first high point where air could gain entry into the system from a well, a surface water supply, or from a hydropneumatic tank.

b. Air valves shall have a minimum nominal size of 1-inch. Two-inch or larger sizes shall be used on mains larger than 10 inches in accordance with engineering principles as recommended by air valve manufacturers.

8. Valves

a. Line valves shall be spaced generally no more than 1,000 feet apart (pursuant to California Waterworks Standards) except in rural locations or on pipelines larger than 12-inch in diameter. Valves should generally be placed at the beginning of all dead end runs and at intersections of gridded piping.

9. Minimum Cover

a. Minimum depth of cover shall be 3.0 feet for water mains.

10. Plans

a. Improvements plans shall be prepared by a State of California registered civil engineer in accordance with standard care of the industry. Plans shall be at 1" = 100' or larger scale. High points shall be identified with an elevation. Plans shall include north arrow, scale, street names, property and right of way lines, existing utilities, connection details, location of pipeline within right of way, locations of all appurtenances including: services, valves, fire hydrants, air valves, blowoffs, and other special construction features.

11. Inspection

a. All water system construction shall be subject to inspection by the CSA. No work shall be performed without a minimum of five working days advance written notice to the CSA.

12. Compaction Testing

a. Where facilities are to be dedicated to the CSA, compaction tests shall be conducted by a California registered Civil Engineering or Geotechnical Engineering Company, or by an approved materials testing laboratory. Tests shall be taken at a minimum of every 1,000 feet, and no less than two per job, and two additional tests shall be performed for each failing test. Test locations shall be selected by the CSA's inspector. Such tests shall be considered to be part of the work and shall be performed at the expense of the applicant. Compaction tests shall be done in compliance with California test methods 216 and 231.

D. TECHNICAL SPECIFICATIONS FOR TRENCH EXCAVATION, BACKFILL AND SURFACE RESTORATION

1. General

   a. Trench backfill above the pipe zone will be divided into the following classifications:

      (1) CLASS "A" BACKFILL: Use in all paved areas, graveled roads, shoulders, driveways, and at other locations as shown on the Plans. (See Standard Details)

      (2) CLASS "C" BACKFILL: Use in all areas where Class "A" backfill is not utilized. (See Standard Details)

      (3) CONCRETE ENCASEMENT OR CONCRETE CAP: May be installed when there will be insufficient cover over the pipe for proper protection and prior approval has been obtained from the CSA. (See Standard Details)

2. Materials

   a. Materials will be divided into the following classifications:

      (1) TRENCH STABILIZATION MATERIAL: Clean imported gravel, free from clay balls and organic matter. Reasonably uniform gradation from fine sand to 2-1/2-inch maximum. Gradation shall be such as to fill all large voids with fines to prevent piping of native soils and prevent rapid and free movement of groundwater.

      (2) PIPE BEDDING: Imported clean sand or well graded sand gravel mix, maximum size of 3/4-inch, free from all organic matter and debris; minimum sand equivalent of 28.

      (3) IMPORTED GRAVEL BACKFILL: A reasonably well-graded silty sand or a well-graded silt, sand, and gravel mixture with a maximum particle size of 3 inches and a minimum sand equivalent of 28. Aggregate base material may be substituted.

         (a) Select native material meeting the above requirements may be used; however, proof that the select native materials meet these requirements will be required.

      (4) NATIVE BACKFILL: Material excavated from the trench. Free of roots and debris with no rocks larger than 6 inches in greatest dimension.

(5) AGGREGATE BASE: Aggregate base shall conform to requirements of Chapter 2, Section G-6, "Aggregate Base," of the Shasta County Development Standards.

(6) PERMANENT PAVEMENT: Permanent pavement shall conform to the requirements of Chapter 2, Section G-5, "Asphalt Concrete," of the Shasta County Development Standards.

(7) TEMPORARY PAVEMENT: Temporary Pavement shall conform to Class "D2" crushed aggregate per SS 203-6 with SC-800 liquid asphalt per SS 203-2.

(8) TACK COAT: Tack coat shall conform to SS-lh emulsified asphalt.

(9) CONCRETE: All concrete for pipe encasements shall, at a minimum, conform to Class 420-C-2000 concrete per SS. 201-1. All concrete for cap in Class "A" backfill shall be Class D high early strength Portland cement concrete (7-sack Type III cement with 2 percent calcium chloride by weight) Caltrans Standard Specifications.

(10) SLURRY MIX: Slurry mix shall consist of a concrete mix with each cubic yard containing one sack of Portland Cement, 12 gallons of water, 2,600 pounds of 3/8-inch rock, and 800 pounds of sand.

3. Workmanship

a. Workmanship will be divided into the following classifications:

(1) EROSION CONTROL: All trench excavation, backfill and surface restoration shall comply with Chapter 4, Section D7, "Erosion Control," of the Shasta County Development Standards.

(2) EXCAVATION: Water entering the trench shall be controlled such that it does not interfere with bedding, backfill, and pipe placement. The depth of the trench for water piping shall be such as to maintain the minimum cover requirements and to conform to the general slope and grade of the existing terrain. No low spots or high spots will be allowed except at air valves, blow-off valves, where service connections are at high points in pipe profile, or instances where unknown utility locations require variations from the slopes of the existing terrain. The depth of the trench for sewers shall be such that the pipe inverts may be laid at the Plan elevations.

(3) OVER EXCAVATION: Any part of the trench extending below the proper grade shall be corrected with approved bedding material.

(a) If soft, spongy, unstable, or other unsuitable material is encountered upon which the bedding material or pipe is to be placed, this

unsuitable material shall be removed to a depth approved by the CSA and replaced with trench stabilization material suitably densified.

(4) BEDDING: Bedding shall be defined as that material supporting, surrounding, and extending to 6 inches above the top of the pipe. Where it becomes necessary to remove boulders or other interfering objects at subgrade for bedding, any void below such subgrade shall be filled with bedding material.

(a) Prior to pipe installation, bedding shall be placed to a minimum depth of 4 inches and then leveled and shaped to provide a firm base for the pipe. Bell holes shall be dug to allow the pipe to be supported by the bottom of the pipe barrel over its full length.

(b) After the pipe has been laid and approved for covering, bedding shall then be placed and densified by hand tamping with an approved T-bar tool. Particular care shall be taken to provide solid backing against the underside of the pipe. The degree of compaction shall not be less than 90 percent of the laboratory maximum density. Bedding shall be placed in 8-inch maximum lifts. A vibrating plate compactor shall be used at the top of the bedding material, 6 inches above the top of the pipe. Bedding shall be placed in the manner described above, regardless of the class of backfill above the bedding material. For water mains the applicant shall then install the pipe findertape in the trench as shown on the Standard Details.

(5) BACKFILL: Class "A" backfill shall be placed in uniform layers not to exceed 8 inches in loose thickness and compacted to 95 percent relative compaction. Compaction shall be by mechanical tamping, vibration, or other approved methods. Compaction shall immediately follow the pipe backfill operation.

(a) Class "C" native backfill shall be firmly compacted by mechanical means. No specific compaction requirements must be met, however, any settlement of trenches during the one year guarantee period shall be promptly repaired at no additional cost to the CSA.

(6) COMPACTION: Where tests indicate the compaction is unsatisfactory, the CSA may reject the work up to half the way to the next acceptable test.

(a) The CSA may order additional compaction tests at any location where work has been found not to be in conformance with the Specifications. Frequency and other requirements for compaction testing is described in the Design Criteria.

(7) TEMPORARY SURFACE RESTORATION: Refer to SS 306-1.5.1. Delete the last two paragraphs and add, "Temporary pavement shall be

placed within 24 hours after completion of the backfill operation except for the road crossings (or other locations where two-way traffic is impaired) where temporary pavement or slurry mix backfill shall be placed to finish grade at the end of each working day. Where slurry mix backfill to finish grade is used rather than temporary paving, the trench surface shall be repaired with temporary paving as needed in the event of raveling. The temporary pavement mixture shall be placed and compacted per SS 302-5.4 and 302-5.5 except that the mixture may be laid cold. A tack coat will be required to the edges of existing paving per SS 302-5.3. No prime coat is required."

(8) PERMANENT TRENCH SURFACE RESTORATION: Prior to the installation of permanent pavement the temporary pavement, if used, shall be removed and the subgrade prepared per SS 301-1 excluding Section 301-1.7. Aggregate base placement shall conform to SS 301-2.2 and 301-2.3. Permanent trench surface restoration shall, unless otherwise directed by the CSA, be applied to the limits of existing pavement. Existing pavement widths from centerline or reference points will be measured where the pipeline will be along the edge of the road. The paving will be replaced to these measured widths and any obliterated fog line striping. Pavement replacement adjacent to normal trench surface restoration may be ordered as well. Placement and compaction of the permanent pavement shall be in accordance with SS 302-5.4, 302-5.5, 302-5.6, and 302-5.7. The contact surface of all cold pavement joints, valve boxes, and the like shall be painted (tack coat) with Grade ss-1h emulsified asphalt immediately before the adjoining asphalt is placed.

(9) SETTLEMENT: Settlement of pavement over trenches during the one year guarantee period shall be considered a result of improper or inadequate compaction of the backfill or base materials. All pavement deficiencies noted during the guarantee period shall be promptly repaired at no additional cost to the CSA, regardless of the acceptability of previous compaction tests.

(10) CONCRETE THRUST BLOCKS: Concrete thrust blocks shall be installed at points along underground pressure piping where a hydraulic thrust exerts a force upon an unrestrained fitting. Thrust blocks shall conform to thrust block details as shown in these Standards.

E. TECHNICAL SPECIFICATIONS FOR SANITARY SEWER

1. General

a. Types of pipes will be divided into the following classifications:

(1) TYPES OF PIPES:

(a) Sewer main and lateral pipe to the property line shall be polyvinyl chloride (PVC).

(b) Lateral pipe from the property line to the structure shall be PVC or ABS sewer pipe.

2. Materials

a. Types of materials will be divided into the following classifications:

(1) POLYVINYL CHLORIDE PIPE AND FITTINGS: PVC pipe and fittings shall comply with ASTM D3034. The minimum standard dimension ratio shall be SDR 35. The joints shall be Ring-Tite manufactured by J-M, Fluid-Tite manufactured by Certainteed, or approved equal.

(2) ACRYLONITRILE-BUTADIENE-STYRENE (ABS) PIPE: ABS pipe and fittings shall conform to ASTM D2751-83a. All joints shall be solvent welded.

(3) PIPE COUPLINGS: Pipe couplings used for joining different types of pipe shall be water-tight neoprene using stainless steel bands and shall be Fernco, Calder Co., or approved equal.

(4) CLEANOUT BOXES: Protective boxes used for lateral cleanouts shall be Cook Concrete Products, No. 10T12 Traffic Box, Christy G-5, or equal. All lids shall have the word "SEWER" cast into the cast iron cover with prominent letters.

(5) LATERAL TAPS: Lateral outlets on the main sewer shall normally be made with a tee or wye tee such that lateral horizontal alignment is 90° to main. When approved by the CSA, a tap may be made in the main using a hole saw. The coupon shall be removed and a Romac style CB saddle shall be installed pursuant to manufacturer's directions.

(6) SEWER SADDLE: Sewer saddles used for joining laterals to main line sewers shall be water tight with adjustable stainless steel strap, bolts, nut, and washers. The body shall be ductile iron with corrosion resistant paint. The gasket shall be rubber compounded for sewer use. The saddle shall be

Romac "CB," Sealtite, or equal. The applicant shall obtain approval from the CSA prior to installation.

3. Workmanship

(1) INSTALLATION OF PIPE:

(a) Before lowering into the trench, the pipe shall be inspected for defects, and all cracked or broken pipe shall be discarded. The ends and interior of the pipe shall be clean. Belled ends shall be laid upgrade. Handling of the pipe shall be accomplished in a manner that will not damage the pipe.

(b) After lowering the pipe into the trench, the bell or coupling end and spigot shall be cleaned of any foreign matter. The joint shall be made in accordance with the manufacturer's printed instructions. Care shall be taken not to buckle or disturb previously laid pipe.

(c) Each joint shall be inspected to insure that it is properly made before backfilling is done. Care shall be taken to prevent any dirt or foreign matter from entering the open end of the pipe. Where it is necessary to cut pipe, such cuts shall be neatly made. The laid pipe shall be true to line and grade and, when completed, the sewer shall have a smooth and uniform invert.

(d) Connections to pipe stubs of a different pipe material shall be made with a suitable connector. Connectors must be approved by the CSA prior to installation.

(2) LINE AND GRADE TOLERANCE:

(a) Sewers shall initially be installed within ±1/4-inch (.02') of planned grade. Following backfill and within one year from construction, the sewer grade shall not vary more than ±1-inch from grade and be such as to not cause stagnant water to pond with a depth of more than 1½ inches.

(b) The horizontal alignment of sewers shall not deviate more than 2 inches from the planned alignment.

(3) TEES AND LATERALS: The exact location of laterals shall be approved by the CSA. Tee branches shall be fully supported by firm material. Pipe and bends shall be installed to the same standards as specified above. Rubber ring caps shall be installed at the ends of all laterals.

(4) CLEANING SEWERS: The pipe shall be cleaned in the following manner:

(a) The cleaning shall be completed with an inflatable rubber ball, of a size that will inflate to fit snugly into the pipe, with a rope or cord fastened to the ball so the ball's position can be known and controlled at all times. The ball shall be placed in the last cleanout or manhole on the pipe to be cleaned, and water shall be introduced behind it. The ball shall be passed through the pipe with only the force of the water impelling it. All debris flushed out ahead of the ball shall be removed at the first manhole where its presence is noted. In the event cemented or wedged debris, or a damaged pipe shall stop the ball, the obstruction shall be removed.

(5) MANDREL TEST: All PVC sewers, except laterals, shall have a mandrel test in accordance with SS 306-1.2.12.

(6) WATER-TIGHTNESS TEST:

(a) Tests for water-tightness shall be performed in the presence of the CSA's representative. The applicant shall furnish all labor, materials, tools, and equipment required to make the tests. No testing for final acceptance of pipe will be done until the trench has been fully backfilled and acceptably compacted to finish grade, or if the sewer is under pavement, to the pavement subgrade.

(b) All sections of pipe shall be tested. Tests shall be made from manhole to manhole or manhole to rodhole. The sewer shall be complete with laterals, and trenches shall be backfilled prior to testing.

(c) Where leakage is in excess of the specified rate, the sewer shall immediately be uncovered, repaired, and retested until the amount of leakage is reduced to a quantity within the specified rate before the sewer will be accepted.

(d) The CSA will determine whether the test is to be by exfiltration or by infiltration. In most instances, an exfiltration test will be required.

(7) EXFILTRATION TEST: All sanitary sewers shall be tested with air unless approved otherwise by the County.

(8) AIR TESTING:

(a) Air testing shall be done immediately following cleaning of the pipe. Air testing shall be performed in accordance with the Uni-Bell Plastic Pipe Association's "Recommended Practice for Low-Pressure Air Testing of Installed Sewer Pipe." See Table 7-5.

(b) Air shall be slowly supplied to the plugged pipe installation until the internal air pressure reaches 4.0 pounds per square inch greater than the average back pressure of any groundwater that may submerge the

pipe, except that the maximum pressure shall not exceed 9 psi. At least 2 minutes shall be allowed for temperature stabilization before proceeding further.

(c) The rate of air loss shall then be determined by measuring the time interval required for the internal pressure to decrease from 3.5 to 2.5 pounds per square inch greater than the average back pressure of any groundwater that may submerge the pipe. Test sections with less than 625 square feet of internal surface area shall be considered acceptable when the leakage rate does not exceed 0.0015 cubic feet per minute per square foot of internal surface area. Test sections with greater than 625 square feet of internal surface area shall be considered acceptable when the leakage rate does not exceed 1.0 cubic foot per minute. See Table 7-5 for maximum allowable test times that correspond to these limits.

(8) TESTING WITH WATER: When directed, testing with water shall be done by filling the upper manhole with water to a depth of at least 3 feet over the top of the pipe or groundwater level, whichever is higher, with the end plugged at the lower manhole. The rate of leakage shall be determined by measuring the amount of water required to maintain the water level in the upper manhole. The test shall be maintained for a period of at least 2 hours. Leakage shall not be in excess of the rate of 20 gallons per inch of pipe diameter per 1,000 feet of pipe per day.

(9) INFILTRATION TEST:

(a) In the event that sufficient groundwater is present, as determined by the CSA, an infiltration test shall be required. In this case, the pipe shall be tested for water tightness by installing plugs at the upper end of the pipe and at the lower end on the exit side of a manhole. The rate of leakage will be determined by periodically removing and measuring the water accumulated at the lower manhole.

(b) Leakage shall not be in excess of the rate specified for water testing by exfiltration.

(10) TELEVISION INSPECTION: Upon completion of balling and cleaning, mandrel testing and leakage testing, and all backfill and compaction to grade, the main sewers (excluding laterals) shall all be television inspected. (Unless exempted for extensions smaller than 1,000 feet per Design Criteria.) During the television inspection, a continuous flow of water of from 1 to 10 gallons per minute shall be flowing in the sewer to allow observation of the profile and the determination of acceptability of any observed sags. Any sags greater than allowed, pipe offsets or broken pipe shall be repaired. Television inspection shall occur no sooner than 7 days after completion of the sewers and no less than 30 days following

completion of all sewers for the project. Television inspection shall conform to Section 5 in the 1990 Edition of National Association of Sewer Service Companies (NASSCO).

TABLE 7-5

SPECIFICATION TIME REQUIRED FOR A 1.0 PSIG PRESSURE DROP FOR SIZE AND LENGTH OF PIPE INDICATED FOR Q = 0.0015

1 Pipe Diameter (in)	2 Minimum Time (min:sec)	3 Length for Minimum Time (ft)	4 Time for Longer Length (sec)	Specification Time for Length (L) Shown (min:sec)							
				100 ft	150 ft	200 ft	250 ft	300 ft	350 ft	400 ft	450 ft
4	3:46	597	0.380 L	3:46	3:46	3:46	3:46	3:46	3:46	3:46	3:46
6	5:40	398	0.854 L	5:40	5:40	5:40	5:40	5:40	5:40	5:42	6:24
8	7:34	298	1.520 L	7:34	7:34	7:34	7:34	7:36	8:52	10:08	11:24
10	9:26	239	2.374 L	9:26	9:26	9:26	9:53	11:52	13:51	15:49	17:48
12	11:20	199	3.418 L	11:20	11:20	11:24	14:15	17:05	19:56	22:47	25:38
15	14:10	159	5.342 L	14:10	14:10	17:48	22:15	26:42	31:09	35:36	40:04
18	17:00	133	7.692 L	17:00	19:13	25:38	32:03	38:27	44:52	51:16	57:41
21	19:50	114	10.470 L	19:50	26:10	34:54	43:37	52:21	61:00	69:48	78:31
24	22:40	99	13.674 L	22:47	34:11	45:34	56:58	68:22	79:46	91:10	102:33
27	25:30	88	17.306 L	28:51	43:16	57:41	72:07	86:32	100:57	115:22	129:48
30	28:20	80	21.366 L	35:37	53:25	71:13	89:02	106:50	124:38	142:26	160:15
33	31:10	72	25.852 L	43:05	64:38	86:10	107:43	129:16	150:43	172:21	193:53
36	34:00	66	30.768 L	51:17	76:55	102:34	128:12	153:50	179:29	205:07	230:46

NOTES:
1. If length of test section is less than the length for minimum time as shown in Column 3, then required test time equals maximum time shown in Column 2.
2. If length of test section exceeds length for minimum time as shown in Column 3, then required test time is computed based on formula in Column 4 where "L" = Length of pipe section in feet.
3. The length of laterals connected to the test section is normally disregarded unless the test fails by a very small amount, then the test time can be recomputed using the appropriate formula.

F. TECHNICAL SPECIFICATIONS FOR MANHOLES

1. Materials

a. PRECAST CONCRETE MANHOLE SECTIONS:

(1) All precast sections, including riser sections, cones, grade rings, flat slab tops, eccentric cones, all per ASTM C478. Grade rings shall be standard product, manufactured particularly for use in manhole construction, sized to fit the cones on which they are to be placed, and the wall height shall be not less than 2 inches high, nor more than 6 inches high.

(2) All precast components shall have bell and spigot or tongue and groove ends.

b. MANHOLE FRAMES AND COVERS: All manhole frames and covers shall be casted iron conforming to ASTM Designation A48, Class 30. Each cover shall have the word "SEWER", "S", or "SANITARY SEWER", cast into the top with 2-inch high letters. Castings shall be of a consistently high quality and shall be free of material and manufacturing defects. Following cleanup and final machining, an asphaltic paint or similar protective coating shall be applied.

c. RODHOLE FRAME AND COVER: Cast iron, conforming to ASTM A48, Class 30. D&L Model H6530 (8"), H6520 (6"), Traffic Box, or equal, with the word "SEWER", "S", or Sanitary Sewer cast into the cover with prominent letters.

d. MORTAR: A proportion of one part Portland cement to two parts clean, well graded sand which will pass a 1/8-inch screen. Admixtures may be used not exceeding the following percentages of weight of cement: Hydrated lime, 10 percent; diatomaceous earth or other inert materials, 5 percent. Consistency of mortar shall be such that it will readily adhere to the surfaces. Mortar mixed for longer than 30 minutes shall not be used.

e. PRECAST MANHOLE BASES: Bases shall be a minimum of 60-inch diameter, 4 inches of concrete below outlet invert with No. 4 horizontal reinforcing bars at 6 inches on center, as manufactured by E.W. Cook Co., Teichert, Inc., or equal. Riser sections in pre-cast bases shall have wall reinforcement equal to standard manhole risers, plus additional reinforcement at openings.

f. WATERSTOPS: Waterstops shall be neoprene rubber gaskets with multiple fins and a stainless steel cinch band.

g. MECHANICAL RUBBER SEAL (MRS): Mechanical rubber seal (MRS) shall be used at all connections to existing manholes. The MRS shall be a rubber boot type coupling using only rubber, stainless steel or PVC compounds as manufactured by Calpico Co. LinxSeal, KOR-N-SEAL Company, Millford, NH

(603/673-8680), PSX by Press Seal Gasket Corp., Ft. Wayne, IN (219/483-0521), Z LOK XP by A LOK Products, Tullytown, PA (215/945-5600), or equal. The internal cavity between the pipe and the structure on the inside of the structure shall be filled with polyurethane caulk (Vulkem, Sikaflex, or equal) flush to the interior surface.

2. Workmanship

a. CAST IN PLACE CONSTRUCTION:

(1) Manholes shall be constructed only when the temperature is above 32°F. All work shall be protected against freezing. Water shall be removed from the excavation and the excavation maintained "dry" during construction of the manhole and during the time required for the concrete or mortar to develop sufficient strength to resist rupture by groundwater pressure. All pipes connected to manholes shall have a joint within two pipe diameters of the manhole wall.

(2) Manhole inverts shall be formed as shown in the Standard Details, either by laying pipe through and cutting out the top portion before completion of the base of the manholes or by forming "U" shaped channels in the concrete base slab. Cut edges of pipe laid through the manhole shall be fully covered by concrete when the manhole invert is complete. The finished invert shall be smooth and true to grade. No mortar or broken pieces of pipe shall be allowed to enter the sewers.

(3) A groove shaped to match the tongue of the first precast concrete riser section of the manhole shall be formed in the base slab. A circular metal form suited to the particular precast manhole manufacturer's joint shall be used to form the groove.

b. PRECAST CONSTRUCTION:

(1) Except as specified herein, all precast manhole sections and grade rings shall be set in joint sealing compound. Joint sealing compound components shall be applied in the field.

(2) The top joint between the frame and the first grade ring shall be set with mortar for adjustment of the final cover elevation. Mortar joints shall not be more than 2 inches thick. Excess mortar shall be trimmed flush.

(3) Joint sealant shall be applied in accordance with the manufacturer's recommendations to the surfaces shown on the Plans. Surfaces receiving joint sealant shall be dry and cleaned of all oil, grease, and loose particles. Sealant shall be applied to the previously placed manhole section.

(4) The upper manhole section shall be placed immediately after placing sealant. All excess joint sealant forced out of the joint on the inside of the manhole shall be removed or troweled smooth.

(5) After completion of the manhole, all plugs shall be completely removed from the sewers and all loose material shall be removed from the manhole.

c. LATERAL SEWER CONNECTIONS: Direct connections to manholes shall be installed with the crown of the lateral sewer pipe 4 inches higher than the crown of the downstream main sewer pipe. The manhole invert shall be channeled for lateral sewers in the same manner as for main sewers.

d. PIPE STUBS: Pipe stubs for future connections shall extend one and one-half to two pipe diameters beyond the concrete base and shall be plugged with standard gasketed plugs in couplings or caps.

e. CONNECTION TO EXISTING MANHOLES:

(1) The connection shall be made in such manner that the modified manhole is equal to a new manhole in appearance and performance. A channel approximately 2 inches larger all around than the connecting pipe shall be cut in the existing manhole base. The rough cut channel shall be finished to its final smooth and uniform shape with mortar.

(2) Particular care shall be taken to obtain a watertight joint where new pipes must penetrate existing manholes. Pipe openings shall be core drilled. A mechanical rubber seal and then mortar shall be installed inside of manhole at cavity. The mechanical rubber seal shall have stainless steel bolts and nuts. Any other method of penetration shall be approved by the CSA.

f. WATER-TIGHTNESS TEST:

(1) Rodholes shall be tested for water-tightness along with the sewers to which they are connected.

(2) All manholes will be visually inspected by the CSA; there shall be no evidence of leakage of water into any manhole from outside sources or any imperfections which allow such leakage. All manholes shall be tested for water-tightness by the applicant and observed by the CSA. The test shall be made, with all connecting pipes plugged, by filling the manhole with clean water to within 2 inches of the bottom of the cast iron frame. The leakage rate for a 4-foot diameter manhole shall not exceed 0.25 gallons per hour per foot of depth or 2.0 gallons per hour, whichever is less, over a test period of not less than one hour. (NOTE: Two gallons per hour leakage is a drop of about 1-inch in a 24-inch diameter grade ring.) Allowable leakage rates will be proportionately increased for manholes with diameters greater than 4 feet.

(3) Visible leaks in a manhole that are observed during the one year guarantee period shall be suitably repaired as approved by the CSA.

G. TECHNICAL SPECIFICATIONS FOR WATER MAIN PIPE AND APPURTENANCES

1. Materials

a. WATER MAIN PIPE: Water main pipe 4 inches through 12 inches in diameter, unless otherwise shown, shall be polyvinyl chloride (PVC) or ductile iron (DI). Two-inch and smaller piping shall be copper tubing except where otherwise approved by the CSA.

b. POLYVINYL CHLORIDE PIPE (PVC):

(1) Polyvinyl chloride pipe (PVC) shall be manufactured, tested, and marketed in accordance with AWWA C900 and shall be Class 150, SDR 18, unless otherwise approved by the CSA.

(2) PVC pipe smaller than 4-inch in diameter shall be Schedule 40 thickness class conforming to ASTM 1785. Pipe joints shall be solvent welded. Fittings shall be Schedule 40 solvent weld-type conforming to ASTM D2466.

(3) All fittings for 4-inch and larger PVC pipe shall be either cast iron or ductile iron conforming to ANSI A21.10 (AWWA C110) and cement mortar lining and bituminous coated ANSI A21.4 (AWWA C104) and ANSI A21.6 or ANSI A21.51. As an option for mechanical or push on joint, fittings shall conform to AWWA C153. Buried fittings shall be wrapped in polyethylene film conforming to AWWA C105.

(4) Fittings for 4-inch and larger PVC pipe may be either mechanical joint or a push-on joint such as Tyler or equal.

(5) PVC pipe shall not be stored or handled in a manner that will permit exposure to sunlight or high temperatures for an extended period.

c. CAST IRON AND DUCTILE IRON PIPE AND FITTINGS:

(1) Ductile iron pipe shall conform to SS 207-9.2.1 and SS 207-9.2.2 and AWWA C151. Ductile iron pipe 4 inches and smaller shall be Class 51, and 6 inches and larger shall be Class 50, except where thicker classes are required for threading flanges or other connections.

(2) Pipe shall be furnished with flanged, mechanical joint, or push on joint for the type of connections.

(3) Fittings shall be either cast iron or ductile iron fittings manufactured in accordance with SS 207-9.2.3 (AWWA C110). Mechanical joint or push on joint may, as an option, conform to AWWA C153.

(4) All pipe and fittings shall be cement lined and sealed; and coated in accordance with the SS 207-9.2.4 (AWWA C104).

(5) The pressure rating, metal thickness class, net weight of pipe without lining, length of pipe, and name of manufacturer shall be clearly marked on each length of pipe in accordance with AWWA C106.

(6) All flanges shall be flat faced ANSI Class 125. Flange gaskets shall be full-faced, 1/8-inch thick rubber.

(7) Flanged pipe shall be shop fabricated to the exact lengths required so that no field cutting or threading is required, except where flanged coupling adaptors are specified.

(8) Bolts and nuts for all underground connections shall be low alloy steel in accordance with the ASTM A193 Class B or AWWA C111 such that the bolts are cathodic to the coupling. Bolts and nuts for aboveground connections shall be either low alloy steel as specified above or cad-plated bolts in accordance with ASTM A307 Grade A or B. Bolts and nuts inside valve boxes and submerged or damp locations shall be 304 stainless steel.

(9) Where Ductile Iron or Cast Iron Pipe and Fittings are buried, the pipe and fittings shall be encased with polyethylene film conforming to AWWA C105.

d. PIPE FINDER TAPE: Pipe finder tape shall be a mylar encased aluminum foil bearing the words, "CAUTION: buried waterline below." Printing shall be under the mylar (reverse printed) so as to be readable through the clear mylar. Surface printing on the tape is not acceptable. The tape shall be blue in color, 2 inches wide, Lineguard Detectable Marking Tape, Type 3 Allen Systems, Inc. Detecto-Tape, or equal.

e. LOCATION WIRE: Location wire shall be solid copper No. 10, insulated, soft drawn wire.

f. COPPER TUBING: Copper tubing shall be per ASTM B88, Type K. Soft annealed copper shall be used without fittings where buried or encased in concrete. Size as specified on the Plans or in these Specifications shall be OD of the tubing. End connections shall be compression style.

g. GALVANIZED STEEL PIPE (GSP):

(1) Galvanized steel pipe shall be hot dip galvanized, standard weight (Schedule 40) conforming to ASTM A120, unless otherwise approved by the CSA. Fittings shall be hot dip galvanized malleable iron Class 150 conforming to ASTM A388 and ANSI B16.3. Connections shall be threaded in accordance with ANSI B2.1, Pipe Threads, unless otherwise approved by the CSA.

(2) A coating shall be applied to the exterior surfaces of all buried galvanized steel pipe and fittings. The coating shall be conformable polyethylene-backed butyl tape, 35 mils thick, such as Polyken 930 manufactured by the Polyken Division of the Kendall Company, Chicago, Illinois; Tapecoat Company, Inc., Evanston, Illinois; or equal. The surface preparation, type of primer and application, and application of tape, including the amount of lap, shall be in accordance with the recommendations of the coating manufacturer.

h. SERVICE SADDLES: Service saddles shall be all brass or bronze when used on PVC pipe, 360-degree support around the pipe. Service saddles for blow-off assemblies and for use on ductile iron pipe shall have ductile iron bodies with two Type 304 stainless steel straps. All service saddles shall be designed for use on PVC pipe or DI pipe, whichever is being used. Brass or bronze service saddles shall be Mueller, Ford, or equal. Service saddles for blow-off assemblies shall be Romac 202S, Ford, or equal.

i. GATE VALVES, TWO INCHES AND LARGER: Gate valves, two inches and larger, for use on PVC, DI and GSP piping shall be 125-pound, totally encapsulated disk, solid wedge resilient seat valves, with non-rising stem, open to left, and have O-ring seals. Exposed valves shall have handwheel operators. Buried valves shall have two-inch square wrench nuts. The valves shall be Mueller, Waterous, or equal, and conform to AWWA C509. Buried gate valves shall be wrapped in polyethylene film pursuant to AWWA C105.

j. VALVE BOXES AND MISCELLANEOUS BOXES: Valve boxes and miscellaneous boxes shall be provided for all valves placed underground. Boxes shall be traffic rated with cast iron ring and cover and concrete main body, Brooks Products, Inc., No. 1-RT, Christy G-5, Cook Concrete Products No. 10T12, or equal. Boxes shall be furnished with 8-inch PVC pipe (SDR 35 MIN) extension sleeves. The lid shall be marked "WATER." The bottom of valve box extensions shall be centered and cut to fit the valve and then sealed with polyurethane foam, mortar, or other approved sealant to prevent soil migration into the box extension.

k. GATE VALVES, EXPOSED, TWO INCHES AND SMALLER: Gate valves, exposed, two inches and smaller, shall be 125-pound, wedge disk type, with non-rising stem, screwed connections, furnished with handwheel operators. Valves shall be bronze and shall open left. The valves shall be Powell No. 207, Crane No. 438, or equal. Use only bronze valves on copper piping.

l. BURIED BUTTERFLY VALVES: Buried butterfly valves shall be tight closing, rubber seated, Class 150, in conformance with AWWA C504 and shall have a cast iron body and disk construction with stainless steel shafts and bearings requiring no lubrication. Valve ends shall be flanged mechanical joint or push on joint. Flanges shall have 125-pound facing and drilling. Valves shall be complete with a sealed reducing-type underground operator and 2-inch square operating nut. Valve operators shall be capable of withstanding an overload input torque of 450 foot pounds at full open or closed position without damage to the valve or valve operators and shall require 48 turns to change the valve setting from full open to full closed and shall be Dresser Model 450, Mueller Line Seal III, or equal.

m. EXTENSION STEMS: Extension stems shall be provided for all buried valves set deeper than 3 feet to the operating nut. Extension stems shall be a minimum of 1-1/2 inches in diameter. Extension stems shall be Schedule 40 steel pipe, with a welded plate box at the bottom which fits over the valve operation nut, a set screw to secure the bottom box to the valve nut, have a 2-inch operating nut welded to the top of the stem, and extend to within 12 inches of the ground surface.

n. CORPORATION STOPS: Corporation stops shall be bronze, full bore, sized per service line Mueller, Ford, Jones No. J-3403, or equal. End configurations shall be IPS, flare or pack joint.

o. WATER METERS: Water meters for individual services shall be a Sensus Model SRSG, or approved equal, complete with one meter coupling on the outlet for adapting to IPS pipe. Meters shall all read in gallons or cubic feet as specified by the CSA.

p. ANGLE METER STOPS: Angle meter stops shall be bronze, as manufactured by Ford, Jones, Mueller, or equal, complete with padlock wings, flare nut suitable for copper tubing, and meter coupling nut and gasket for meters specified above.

q. METER BOXES: Water boxes for meters shall be as follows:

TABLE 7-6
WATER BOXES

METER SIZE	NOTE	BOX SIZE MINIMUM I.D.	COOK CONCRETE* BOX/VAULT #	Christy* Box/Vault #
5/8"x3/4"	(a)	10¼"x17¼"	B0.75	B9W/B9G Lid
1"	(a)	12"x20"	B1.0	B12 W/B12G Lid
1½"	(a)	13¼"x24"	B1.5	B30 W/B30G Lid
2"	(a)	17"x30"	B2.0	B36 W/B36G Lid
3"	(b)	30"x48"	B4.0	B48
4"	(b)	30"x60"	B5.0	B52
6"	(b)	48"x78"	V4.0 6.5	R37P

*or approved equal

Notes:

(1) Reinforced concrete cover with 5"x8" cast iron hinged reading lid.

(2) Steel checker plate lids with 5"x8" or 10" round self closing reading lid centered over meter register. For 3" and 4" meters a two piece lid is required. For 6" meters a four piece lid is required.

(3) Vault design for meters and associated equipment larger than 6" require the approval of the CSA. Size and depth should be adequate to allow access for maintenance and/or meter removal.

(4) Vault design for combination domestic/fire detector meters shall meet manufacturers recommendations and shall require the approval of the CSA.

(5) H-10 steel traffic lids shall be required for any box in driveways, parking areas, shoulders or areas with rolled curb.

r. COMBINATION AIR RELEASE AND VACUUM VALVES: Combination air release and vacuum valves shall have cast iron bodies and covers and stainless steel floats, float guides, bushings, and level pins of stainless steel or bronze. Valves shall be designed for operating service to 300 psi, and shall be APCO, Crispin, or approved equal.

s. COMBINATION AIR VALVE (CAV) ENCLOSURE/BOX: Combination air valve (CAV) enclosure/box shall be as follows:

Case 1 - **Above Grade Enclosure** - See Standard Detail W-21. (Available from Cook Concrete Products with precast concrete slab, or other fabricators)

Case 2 - **Below Grade Box**

TABLE 7-7
BELOW GRADE BOXES

VALVE SIZE	NOTE	BOX SIZE MINIMUM I.D.	COOK CONCRETE* BOX #	CRISTY* BOX #
2", 3" & 4"	(a,c)	17"x30"	B2.0	B36
6" & 8"	(b,c)	30"x48"	B3.0	B48

* or approved equal

Notes:

(1) For 2", 3" & 4" valve box a one piece lid shall be required.

(2) For 6" & 8" valve box a two piece lid shall be required.

(3) Lids shall be solid reinforced concrete marked "Water," except when boxes are in driveway traffic areas or next to rolled curb and gutter, where H-10 steel traffic lids are required.

t. BACTERIOLOGICAL SAMPLING STATION ENCLOSURE: Bacteriological sampling station enclosure shall be as follows:

(1) See Standard Detail W-13 for Materials and Plumbing Installation.

(2) See Standard Detail W-14 for Materials and Enclosure Design.

u. BACKFLOW DEVICE ASSEMBLY BOXES, VAULTS: Backflow device assembly boxes and vaults shall be as follows:

Double Check (DC)

* Carson Industry Box No. 1419-13 w/No 1419-3 lid - ¾" or 1" (DC)
* Carson Industry Box No. 1320-13 w/No 1320-3 lid - 1½" or 2" (DC)
* Carson Industry Box No. 1730-12B and lid - 3" or 4" (DC)
* Cook 6U vault or Christy R37 pit w/approved lid by Water Utility - 6" or 8" (DC)
* or equal

Single Check (SC)

Christy B-40 w/B40D or equal.

v. BLOWOFF VALVE BOXES: Blowoff valve boxes for blow-off assemblies shall be Cook No. 2.0 meter boxes, Christy B36, or equal.

w. FIRE HYDRANTS:

(1) Fire hydrants shall be waterous Pacer WB67, with oil reservoir, bronze seat ring, weather shield and bronze nut, mechanical attached nozzles, Mueller Super Centurion 200, Kennedy Guardian K-81A, or equal, equipped with chained nozzle caps. The fire hydrants shall have a five and one-quarter inch minimum hydrant valve, two 2-1/2-inch hose nozzles, and one 4-1/2-inch steamer nozzle. The operating nut shall be a 1-inch pentagon nut. The hose and steamer nozzles, operating nut, and direction of opening shall be per National Standard Specifications. The hydrant shall have a 42-inch bury to the bottom of the connecting pipe and shall have an automatically operated stop and drain. Fire hydrants shall conform to AWWA C502.

(2) A 6-inch diameter lateral and gate valve conforming to these Specifications shall be provided from the main waterline to each hydrant.

x. FLANGED COUPLING ADAPTERS (FCA) AND FLEXIBLE COUPLINGS (FC):

(1) Flanges coupling adapters (FCA) and Flexible Couplings (FC) shall be of the style and type recommended by the manufacturer and approved by the CSA. Steel couplings shall be fusion epoxy lined and coated (8 mil minimum thickness). All couplings shall be supplied with low alloy steel nuts and bolts per AWWA C111 or equal. Flanged coupling adapters shall be furnished and installed with adequately sized thrust protection anchor bosses and anchor studs unless thrust is restrained by concrete thrust blocks. The pipe shall be drilled for installation of the studs. Flanged coupling adapters and flexible couplings shall be sized to be compatible with the pipe on which they are to be installed and shall be as manufactured by Dresser, Rockwell, or equal.

(2) Buried flanged coupling adapters and flexible couplings shall be wrapped with polyethylene film per AWWA C105.

2. Workmanship

a. All work shall conform to Plan details, the Standard Water System Details and the manufacturer's recommendations.

b. Materials shall be handled in a manner that will not damage the material or its coating. Before installation, each article shall be inspected, and any damaged material discarded. Any damaged coating shall be repaired.

c. The interior and ends of the pipe and appurtenances shall be clean. When it is necessary to cut pipe, such cuts shall be neatly made.

d. Pipe and fittings shall be installed in strict conformance with the manufacturer's recommendations. Maximum pipeline joint deflections and minimum curve radii shall conform to these Standards and with published tables prepared by the manufacturers. Additional vertical angle fittings shall be installed where required to maintain conformance with the manufacturer's published tables on maximum pipeline joint deflections and minimum curve radii. Up to one additional coupling per 20-foot length of PVC pipe or in 18-foot length of DI pipe may be installed in lieu of an additional vertical fitting, provided the installation is in compliance with the manufacturer's recommendations.

e. Pipes shall be laid with the bell end ready to receive the next pipe. Bell holes shall be dug and the trench bottom graded such that the pipe is supported along the barrel and not the bell.

f. In addition to exercising extreme care to keep the inside of the pipe clear of dirt and debris during installation, temporary plugs shall be inserted or placed over all ends of the pipe except during periods of continuous observation such as during pipeline installation.

g. PIPE CUTTING: All pipe shall be cut to fit accurately without damaging the pipe or lining and so as to leave a smooth end at right angles to the axis of the pipe.

h. PIPE THREADS: Pipe ends shall be reamed to the full bore of the pipe. Threads shall conform to ASNI B2.1. In making up threaded joints, an accepted thread lubricant shall be applied to the male threads only.

i. PIPE JOINTING: Pipe jointing for cast iron pipe shall conform to SS 306-1.2.6 and 306-1.2.8, respectively. Pipe jointing for PVC pipe shall conform to SS 306-1.2.9 or 306-1.2.10, as applicable.

j. METALLIC PIPE COVERINGS: All buried ductile iron pipe, fittings, and valves shall be wrapped with polyethylene film per AWWA C105. All galvanized iron pipe shall be tape wrapped pursuant to the description under Materials in this section.

k. FLANGED JOINTS: Flanged joints shall be square and watertight with even pressure on the gaskets.

l. WATER SYSTEM TESTING: Upon completion of the installation of the water mains and appurtenances and all parts of the system shall be pressure tested in the presence of a representative of the CSA. Each section of water main between line valves shall be tested separately by closing the adjacent line valves and bringing the isolated section up to a test pressure that will cause the pressure at the lowest point in the isolated section to be at least 150 pounds per square inch or 50 pounds per square inch above the maximum working pressure, whichever is greater, and maintain at least that pressure for a minimum of one hour. At the end of the test period, the test pressure shall be at least equal to the starting test pressure in order to properly determine any leakage.

m. Leakage shall not be in excess of 2 gallons per inch of diameter per 1,000 feet of pipe per 24 hours. Leakage shall be determined by pumping into the closed system from a barrel and maintaining the required pressure or by other means approved by the CSA. Where leakage is in excess of the specified rate, the amount of leakage shall be reduced to a quantity within the specified rate before the installation is accepted. In addition, all visible leaks shall be repaired.

n. Where interconnections are made between an existing and a new system at other than existing isolation valves the interconnection piping between the existing system and the first new isolation valve will not have to be pressure tested. However, when these interconnections are made and pressurized, any noticeable leaks shall be corrected.

o. Where the new system interconnects to an existing system at an existing isolation valve, the new system shall be either tested against the existing isolation valve or against a temporary thrust protected blind flange, cap or plug within 15 feet of the existing valve to test against.

p. If the second option is used the final connection to the existing valve after the pressure test is completed will not have to be tested but any noticeable leaks shall be corrected.

q. All Class 200 or SDR 14 8-inch piping shall be tested at 200 psi.

r. STERILIZATION FOR COMPLETED WATERLINES: Sterilization for completed waterlines shall be done per AWWA C651-86, Section 5.2, Continuous Feed Method. Once the water system has been successfully hydrostatically tested, it shall be flushed of all dirt and debris. Following adequate flushing, the entire system shall be chlorinated by one of the following methods: sodium hypochlorite or calcium hypochlorite and water mixture. Chlorinating agent shall be applied at the beginning of the section adjacent to the feeder connection and shall be injected through a corporation cock, hydrant, or other connection ensuring treatment of the entire line. Water shall be fed slowly into a new line with chlorine applied in amounts to produce a residual of not less than ten parts per million in all parts of the line for a period of not less than 24

hours. During the chlorination process, all valves and accessories shall be operated.

s. The tablet method of applying the chlorine as specified in AWWA C651-86 may be used. If this method does not provide adequate disinfection, chlorine shall be applied by one of the above described methods until acceptable bacteriological tests are obtained.

t. After chlorination, the water shall remain in the pipeline, or be diluted until the chlorine residual has dropped to below two parts per million before it is flushed from the extremities of the system. Furthermore, it may be necessary to land apply the chlorinated water or otherwise dechlorinate the water in order to discharge it to any storm drain, drainage channel or surface water where damage could occur to fish or other aquatic life or in violation of any governmental laws or regulations. All of the pipeline shall then be drained and refilled with a bacteriologically acceptable water supply. The new pipeline shall then be tested for bacteriological acceptability as determined by a minimum of four test samples for coliform bacteria taken from CSA selected points in the pipeline. If such tests indicate contamination, the pipeline shall be disinfected again.

u. At connections to the existing system where some sections of piping cannot be reasonably disinfected in the normal procedure, all new pipe, fittings, etc. shall be sprayed or swabbed inside and out with a strong (one to five percent) chlorine solution prior to installation and installed in a sanitary manner so as not to contaminate the system. Should contaminants such as dirt or dirty water be allowed to enter the existing piping, the existing water system shall be flushed and disinfected as required by the CSA.

FIGURE
G-1

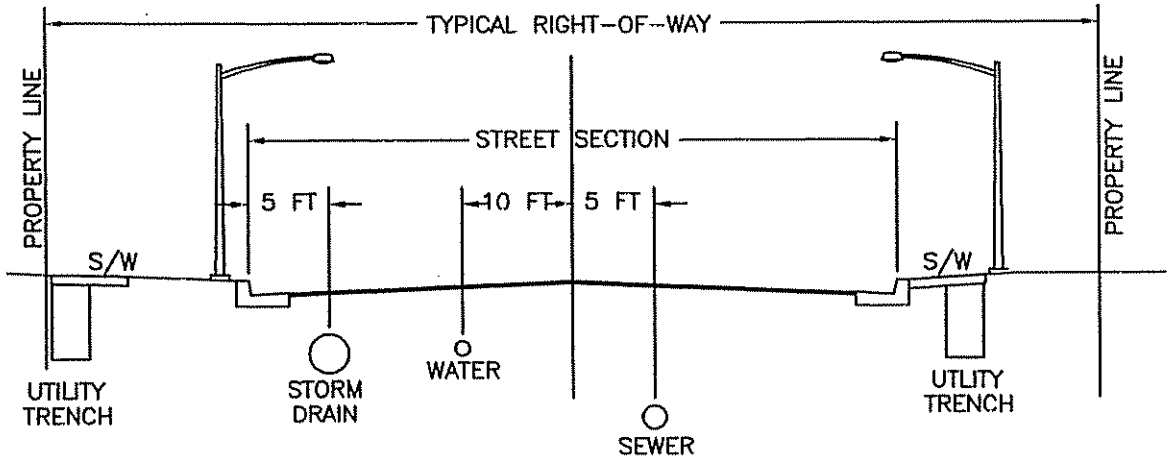

URBAN

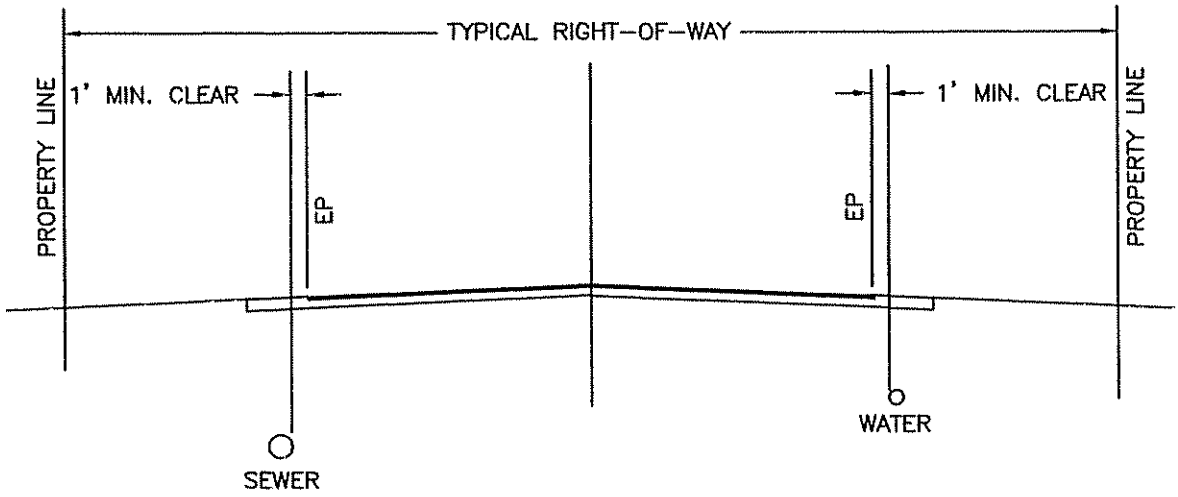

RURAL

SCALE: NTS	DATE: JUNE 1996	• SHASTA COUNTY SERVICE AREAS •	
		APPROVED BY: William E. Lyman	UTILITY LOCATIONS
MARK / DATE / REVISION		WILLIAM E. LYMAN	

FIGURE G-2

NOTES:

1. CONCRETE FOR ENCASING PIPE SHALL BE CLASS 420-C-2000.
2. BEDDING MATERIAL FOR ALL PIPE INCLUDING DUCTILE IRON SHALL BE GRAVEL OR CRUSHED ROCK AND SHALL HAVE A MAXIMUM SIZE OF 3/4" AND BE REASONABLY GRADED FROM COARSE TO FINE WITH A MINIMUM SAND EQUIVALENT OF 28.
3. IMPORT GRAVEL BACKFILL SHALL BE STREAM GRAVEL OR CRUSHED ROCK AND BE REASONABLY WELL GRADED FROM COARSE TO FINE WITH A MAXIMUM SIZE OF 3" AND A MINIMUM SAND EQUIVALENT GREATER THAN 28.
4. ON ALL CONCRETE ENCASED PIPES, PIPE SHALL BE SUPPORTED ON CONCRETE BLOCKS, GROUT PADS, OR BY OTHER APPROVED METHOD. TWO SUPPORTS SHALL BE REQUIRED PER JOINT OF PIPE. CARE SHALL BE TAKEN NOT TO FLOAT PIPE WHILE PLACING CONCRETE.
5. SERVICE LATERALS TO HAVE SAME BEDDING AND BACKFILL AS MAINS.
6. FOR CONC ENCASED PVC PIPE USE VERTICAL (METAL OR PLASTIC) SHEET IN TRENCH TO FORM CONTROLLED JOINT AT COUPLINGS AT MAXIMUM SPACE OF 10' ON CENTER. WRAP COUPLING WITH 2" THICK INSULATION. CENTER SHEET ON COUPLING.

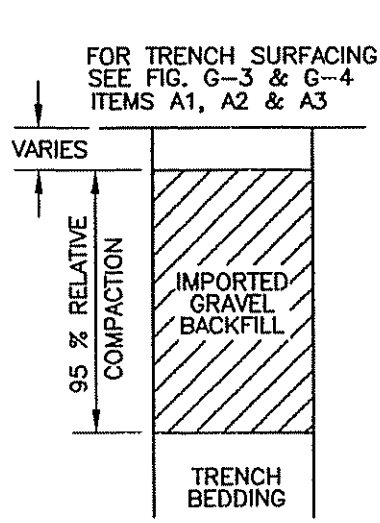

FOR TRENCH IN R/W WHERE NATIVE MATERIAL HAS A SAND EQUIVALENT OF LESS THAN 28

CLASS 'A'

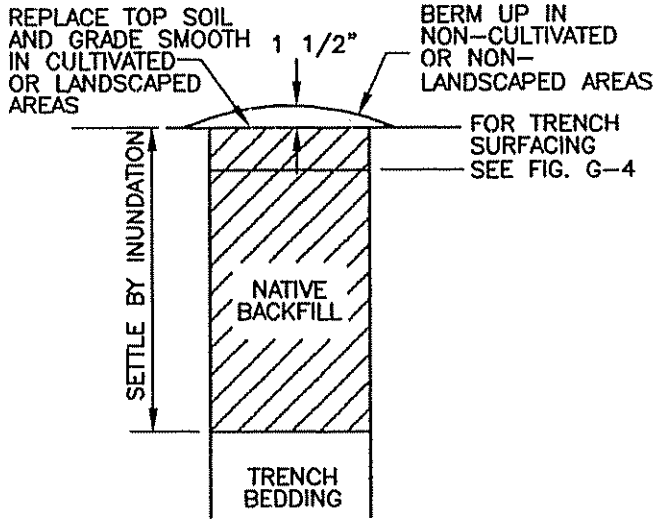

FOR TRENCH NOT IN R/W AND NOT IN STREAMBED

CLASS 'C'

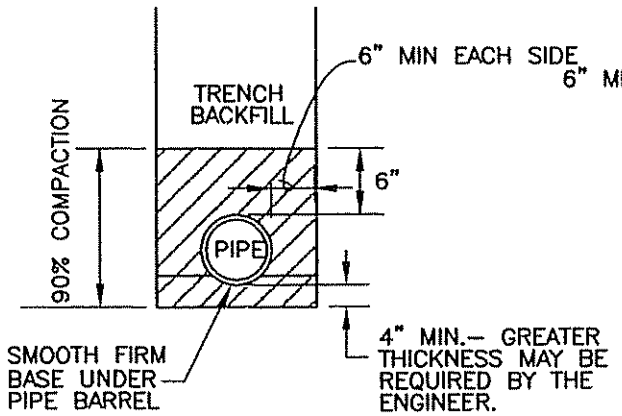

BEDDING

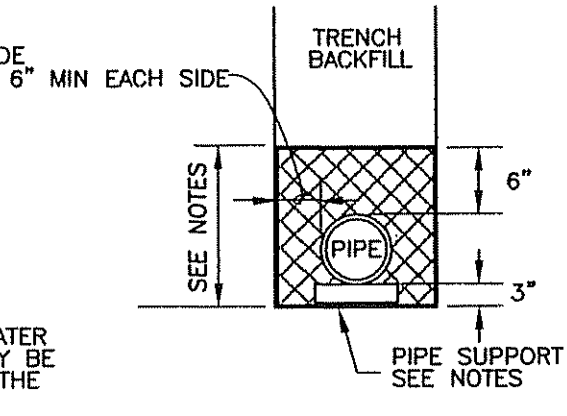

CONCRETE ENCASEMENT

SCALE: NTS	DATE: AUG 1996	• SHASTA COUNTY SERVICE AREAS •
		APPROVED BY: William E. Lyman
MARK / DATE / REVISION		WILLIAM E. LYMAN

TRENCH BACKFILL

FIGURE G-3

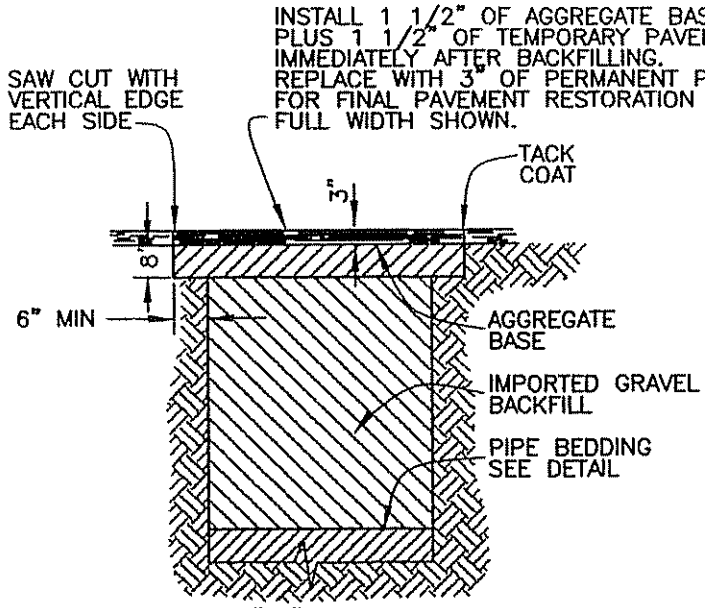

CLASS "A1" BACKFILL WILL BE USED IN COUNTY ROADS WHERE PAVING IS LONGITUDINAL TO ROAD AND ACROSS DRIVEWAYS.

NOTE: WHERE REMAINING PAVING IS LESS THAN 1' WIDE AFTER TRENCHING, REMOVE AND REPLACE PAVEMENT TO EDGE OF EXISTING PAVING ⊕ FULL THICKNESS.

CLASS 'A1' BACKFILL

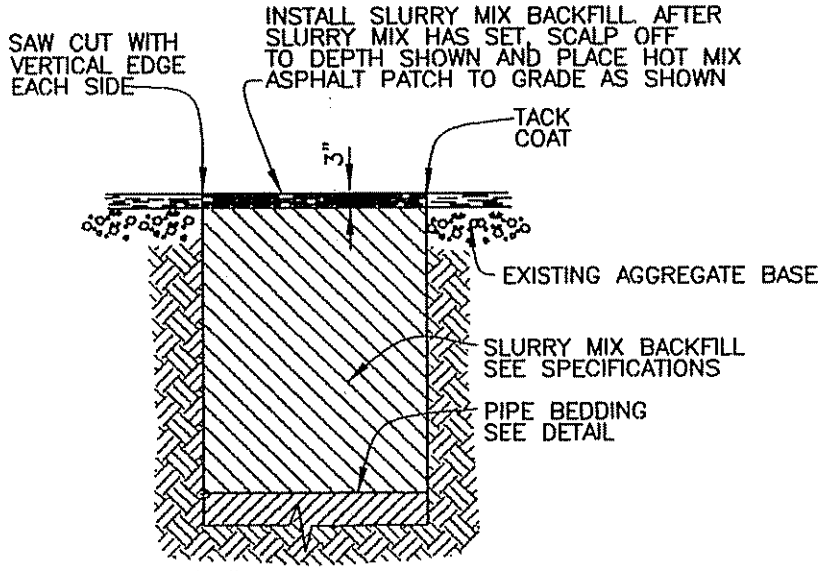

CLASS "A2" BACKFILL WILL BE USED IN ALL PAVED STREET CROSSINGS. IT MAY ALSO BE USED AT OTHER LOCATIONS IN LIEU OF CLASS "A1"

CLASS 'A2' BACKFILL

SCALE: NTS	DATE: JUNE 1996	• SHASTA COUNTY SERVICE AREAS •	
		APPROVED BY: William E. Lyman	TRENCH RESURFACING
MARK / DATE / REVISION		WILLIAM E. LYMAN	

FIGURE G-4

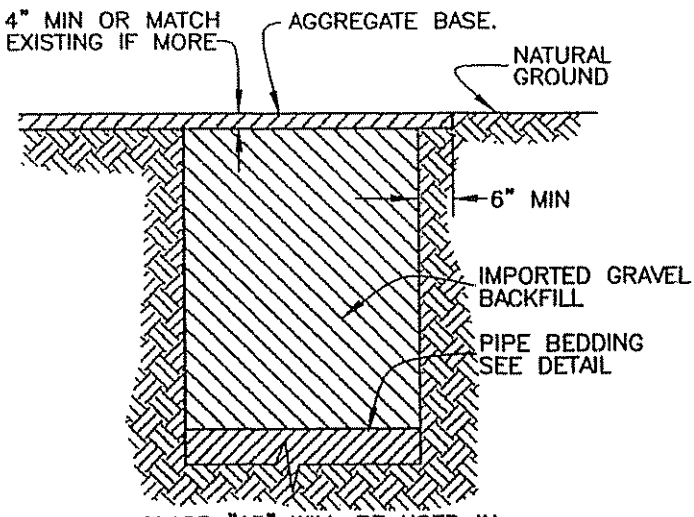

CLASS "A3" WILL BE USED IN UNPAVED DRIVEWAYS, AND IN SHOULDERS OF COUNTY ROADS.

CLASS 'A3' BACKFILL

NOTE: WHEN IN CULTIVATED OR LANDSCAPED AREAS THE TOP 1' OF SOIL SHALL BE REPLACED WITH EXISTING OR IMPORTED TOP SOIL. THE SURFACE SHALL BE RE-LEVELED FOLLOWING INUNDATION AND TRENCH SETTLEMENT. LAWNS OR OTHER LANDSCAPING SHALL THEN BE REPLACED.

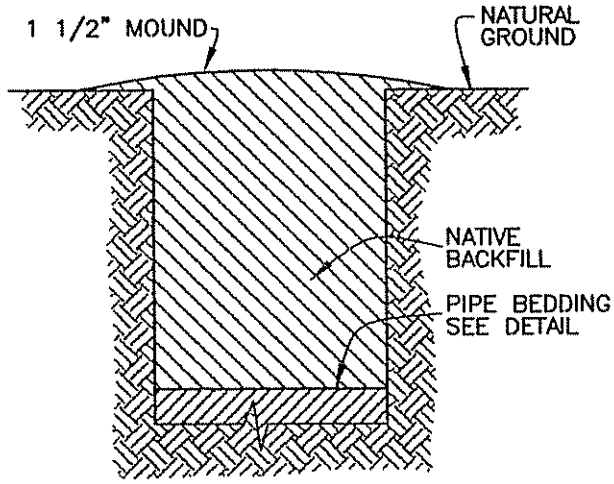

CLASS "C" BACKFILL WILL BE USED IN AREAS THAT ARE OUTSIDE PAVED AREAS, SHOULDERS AND FUTURE STREET AREAS.

CLASS 'C' BACKFILL

SCALE: NTS	DATE: JUNE 1996	• SHASTA COUNTY SERVICE AREAS •	
		APPROVED BY: William E. Lyman	TRENCH RESURFACING
MARK	DATE / REVISION	WILLIAM E. LYMAN	

FIGURE
S-1

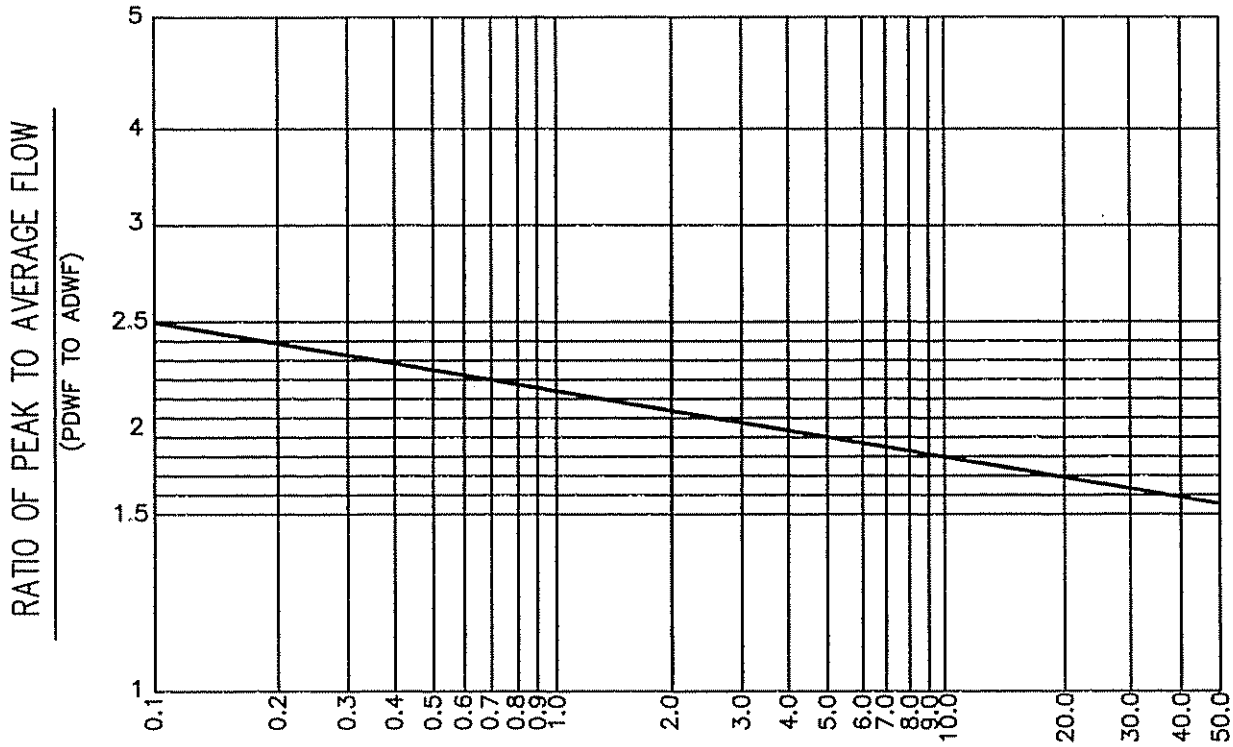

SEWAGE FLOW PEAKING FACTORS

(DOES NOT INCLUDE I & I)

SCALE: NTS	DATE: JUNE 1996	• SHASTA COUNTY SERVICE AREAS •	
		APPROVED BY: William E. Lyman	PEAKING FACTORS
MARK / DATE / REVISION		WILLIAM E. LYMAN	

FIGURE S-2

NOTES:

1. 90° TAPS ARE ACCEPTABLE.
2. RISERS SHALL BE INSTALLED WHEN DEPTH OF SEWER EXCEEDS 6 FT.
3. VERTICAL INSTALLATIONS (STOVEPIPING) WILL NOT BE ALLOWED.
4. WHERE MAIN IS IN AN EASEMENT, INSTALL A TEE, PIPE BRANCH TO PROPERTY LINE, CLEANOUT AND PLUG.

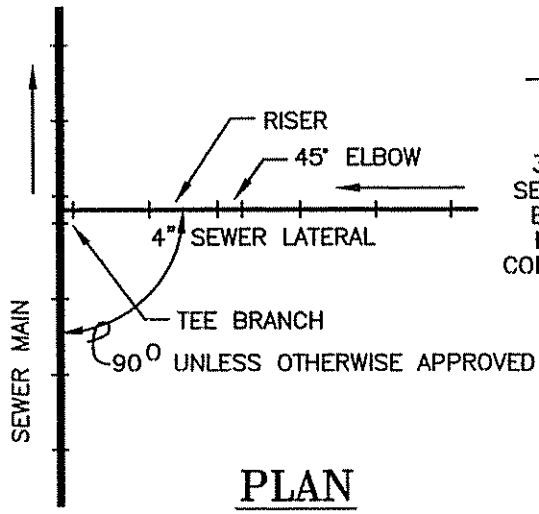

PLAN

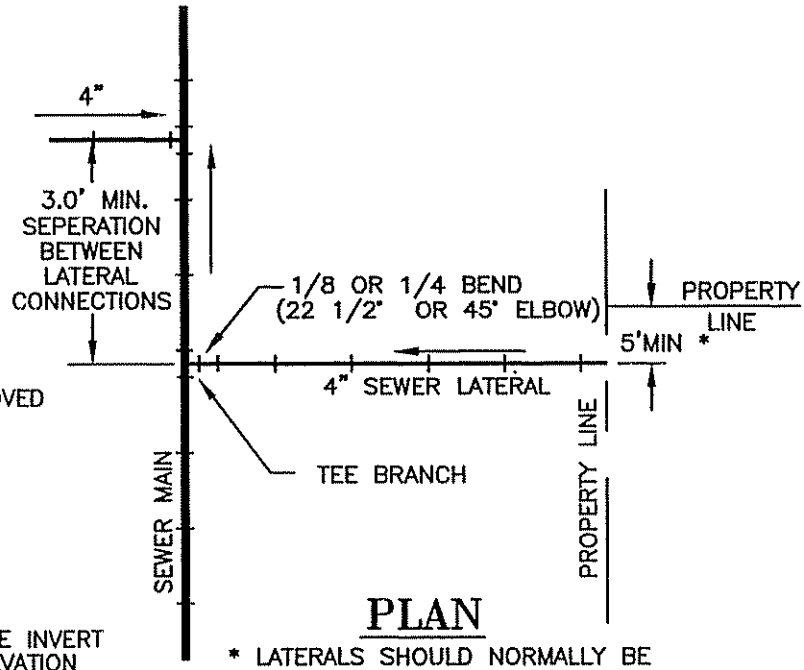

PLAN

* LATERALS SHOULD NORMALLY BE PLACED NEAR CENTER OF LOT, BUT MAY BE AS CLOSE TO PROPERTY LINE AS 5' WHEN NEEDED FOR GRADE. KEEP 10' MIN FROM WATER SERVICE.

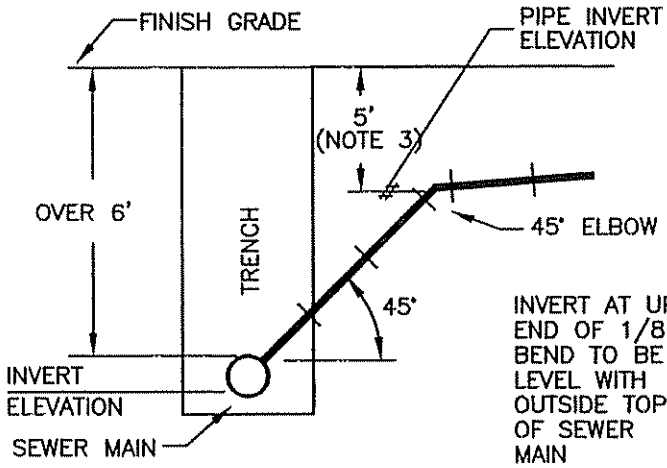

ELEVATION

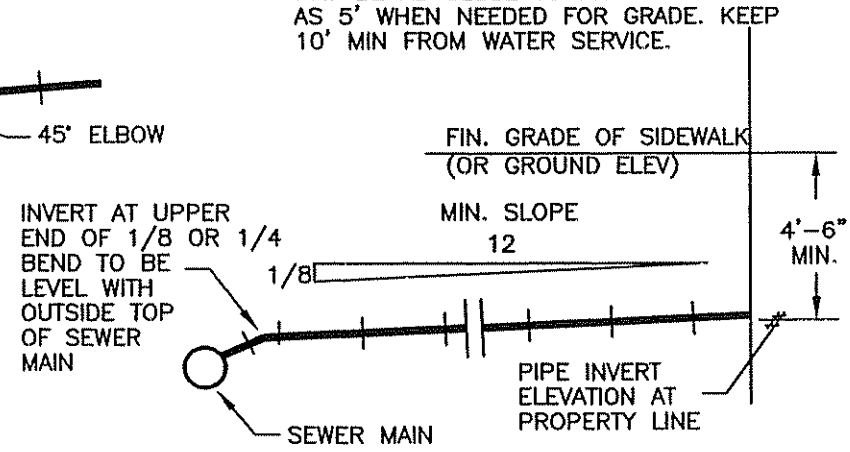

TYP. HOUSE CONNECTION RISER

WHEN COVER OVER 6'

TYP. HOUSE CONNECTION

SCALE: NTS	DATE: JUNE 1996	• SHASTA COUNTY SERVICE AREAS •	
		APPROVED BY: William E. Lyman	TYPICAL HOUSE CONNECTION
MARK	DATE	REVISION	WILLIAM E. LYMAN

STANDARD 4 FT. SEWER MANHOLE

MARK	DATE	REVISION

SCALE: NTS

DATE: JUNE 1996

APPROVED BY:

WILLIAM E LYMAN

• SHASTA COUNTY SERVICE AREAS •

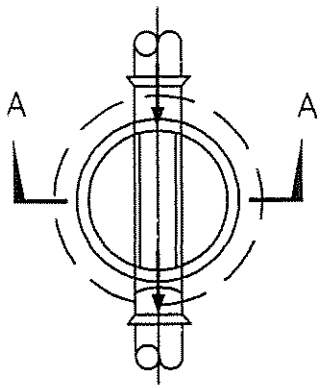

PLAN

NOTES:

1. WHERE MANHOLES ARE NOT LOCATED IN STREETS OR TRAVELED WAY PLACE TOP OF MANHOLE 12" TO 18" ABOVE EXISTING GROUND UNLESS OTHERWISE SHOWN ON PLANS.
2. ALL CONCRETE USED IN MANHOLE BASE & COLLAR SHALL BE CLASS 520-C-2500.
3. ECCENTRIC TYPE CONC. CONE SECTION SHALL BE INSTALLED IN PLACE OF CONCENTRIC CONES WHEN DIRECTED BY THE COUNTY. WHEN ECCENTRIC CONE SECTION IS INSTALLED, THE VERTICAL WALL SHALL BE LOCATED DOWNSTREAM.
4. PIPE MAY BE LAID THROUGH A LINE MANHOLE EXCEPT WHEN A GRADE OR LINE CHANGE OCCURS. MINIMUM DROP THROUGH ALL OTHER MANHOLES SHALL BE THE DIFFERENCE IN DIAMETER IN UPSTREAM AND DOWNSTREAM PIPES OR 0.17 FT. WHICH EVER IS GREATER.
5. PRECAST REINFORCED CONCRETE PIPE SEGMENTS SHALL CONFORM TO ASTM DESIGNATION: C478-70 4" MIN. THICKNESS.
6. PRECAST REINFORCED CONCRETE MANHOLE RISER SECTIONS SHALL BE FORMED WITH MALE AND FEMALE ENDS.
7. PRECAST CONCRETE BASES MANUFACTURED BY COOK CONC. PRODUCTS OR TEICHERT AGGREGATE MAY BE USED IN LIEU OF POURED IN-PLACE BASES. PROVIDE 3" MIN COMPACTED & LEVELED SAND OR 3/4" MINUS GRAVEL UNDER PRECAST BASES.
8. ALL SEGMENTS SHALL BE BEDDED IN FLEXIBLE JOINT SEALANT: (KENT-SEAL NO. 2 OR EQUAL). A DOUBLE BEAD SHALL BE USED IF SEALANT IS 3/4-INCH OR 1-INCH DIAMETER. A SINGLE BEAD SHALL BE USED IF THE SEALANT IS 1 1/4-INCH OR GREATER DIAMETER.
9. ON CAST IN PLACE BASES USE CIRCULAR METAL FORM TO SHAPE FULL DEPTH GROOVE TO MATCH TONGUE ON RISER SECTION. BOTTOM OF GROOVE TO BE 1" MIN ABOVE TOP OF PIPE.
10. ON CAST IN PLACE BASES A RUBBER RING JOINT SHALL BE PROVIDED WITHIN 2 DIAMETERS OF BASE.

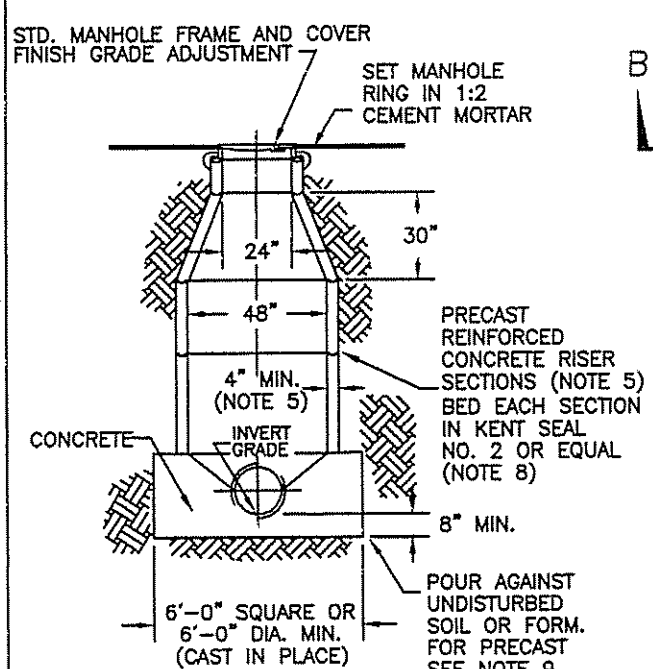

SECTION A-A

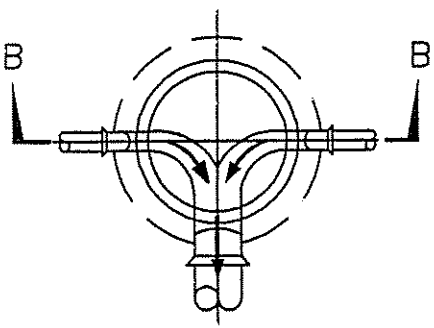

PLAN

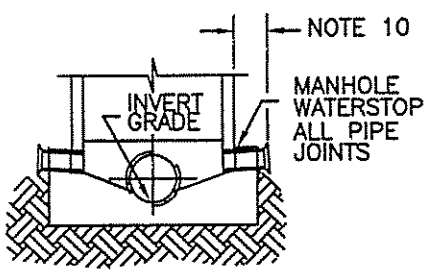

SECTION B-B

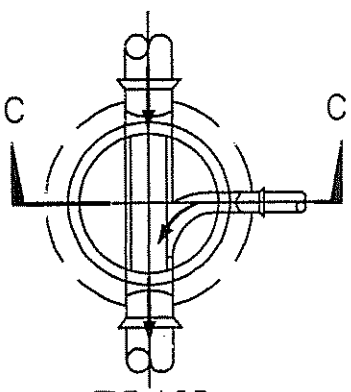

PLAN

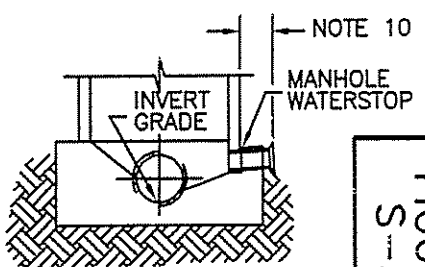

SECTION C-C

FIGURE S-3

FIGURE S-4

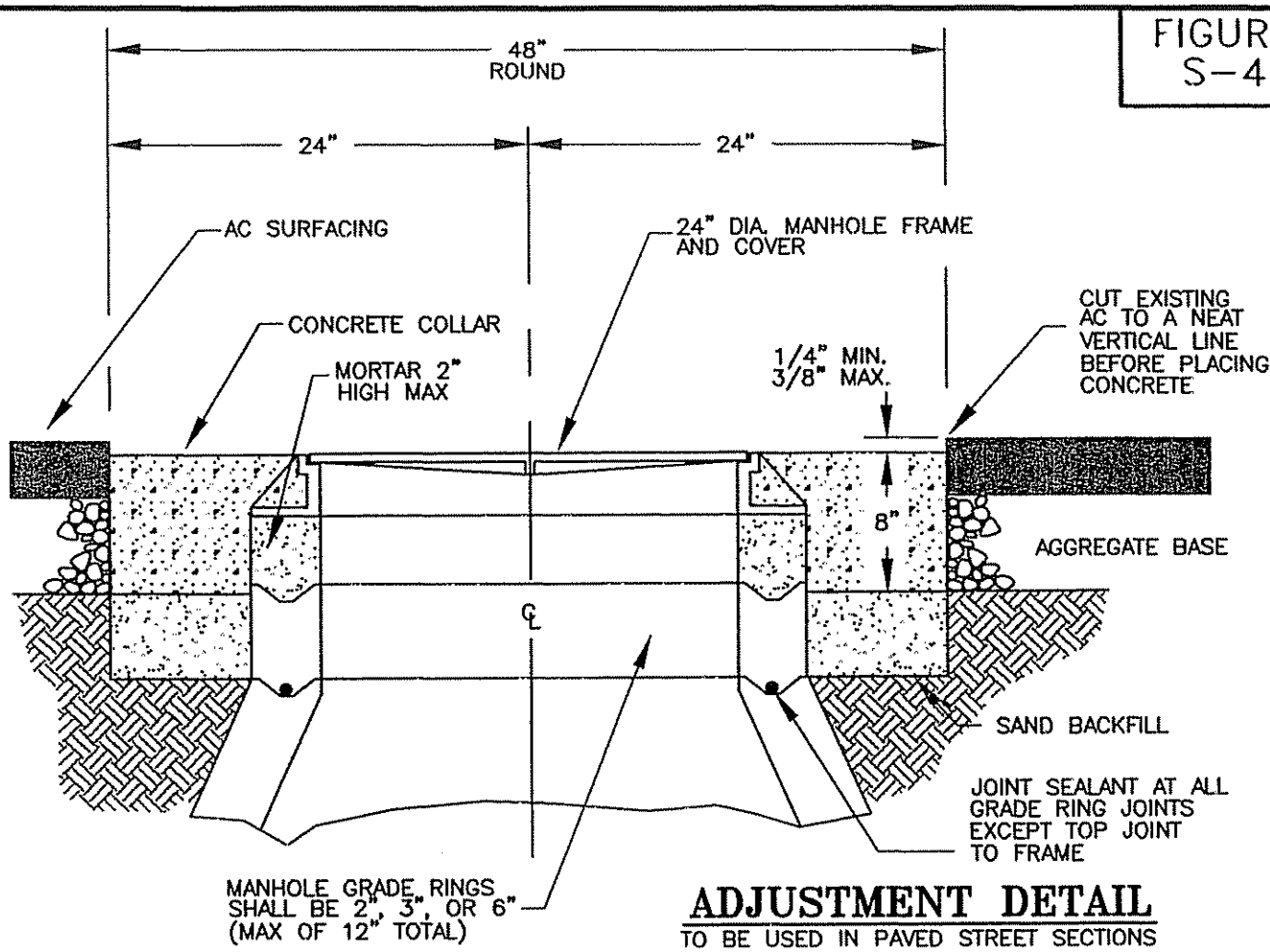

ADJUSTMENT DETAIL

TO BE USED IN PAVED STREET SECTIONS

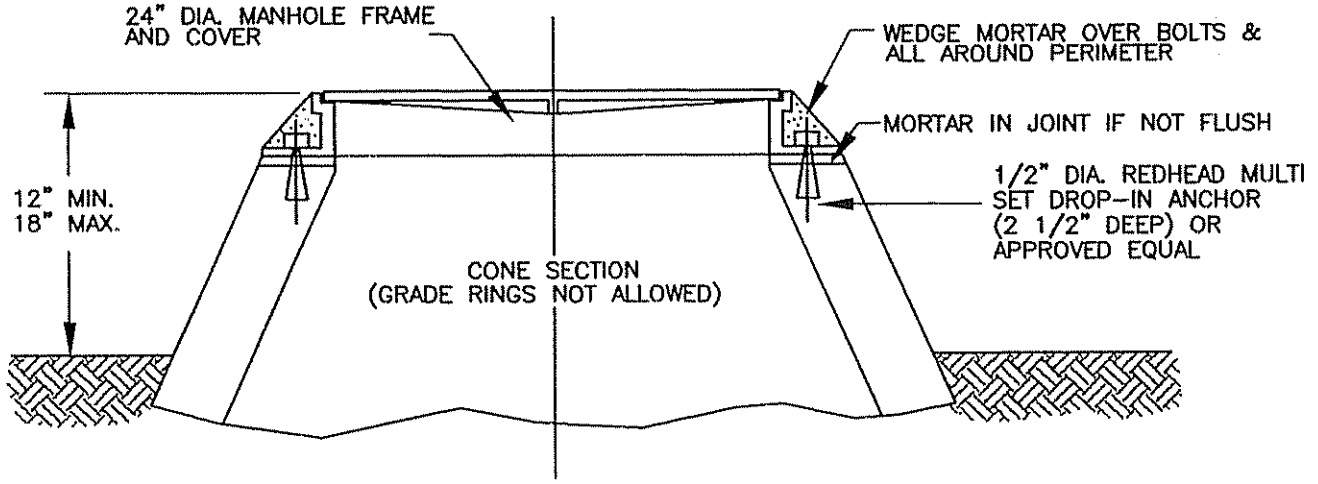

NOTE:

WHEN MANHOLES ARE IN SHOULDERS, THE SHOULDER SHALL BE PAVED TO EXTEND STREET GRADE WITH TAPPERED FLARES TO CONC COLLAR EXTENDING 20' ON EACH SIDE OF MANHOLE AND A MINIMUM OF 1' FROM THE MANHOLE LID.

ADJUSTMENT DETAIL

TO BE USED IN UNIMPROVED AREAS
(SHOWING REQUIRED FRAME ASSEMBLY ANCHORAGE)

SCALE: NTS	DATE: AUG 1996	• SHASTA COUNTY SERVICE AREAS •
MARK / DATE / REVISION	APPROVED BY: William E. Lyman — WILLIAM E. LYMAN	MANHOLE ADJUSTMENT AND ANCHORAGE DETAILS

FIGURE S-5

BACKFILL FOR SERVICE CONNECTION PIPE SHALL BE THE CLASS APPROPRIATE FOR THE SERVICE CONNECTION PIPE LOCATION.

SERVICE CONNECTIONS ARE 4--INCH--DIAMETER PIPE UNLESS OTHERWISE NOTED.

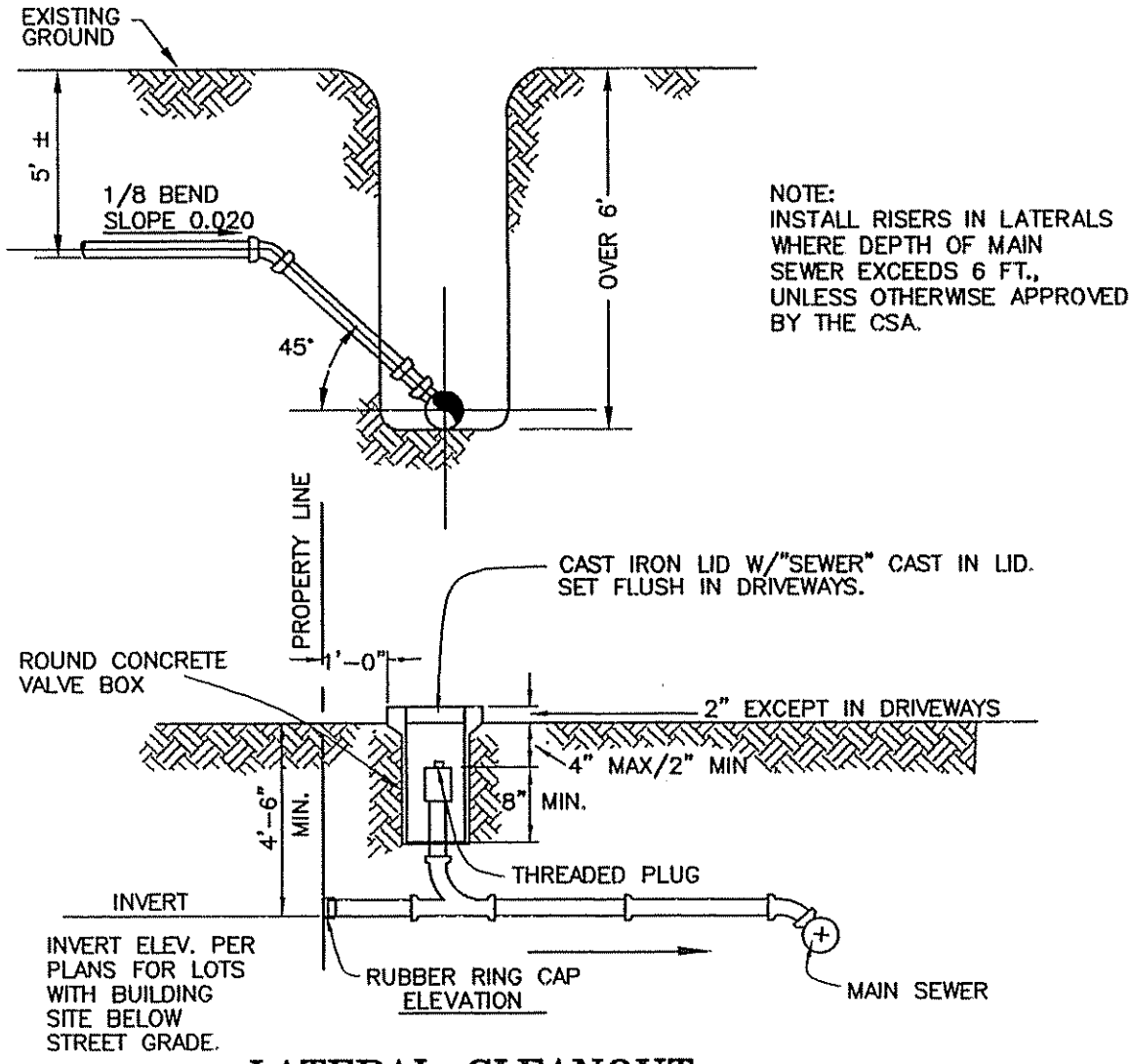

LATERAL CLEANOUT

NTS

SCALE: NTS	DATE: JUNE 1996	• SHASTA COUNTY SERVICE AREAS •	
		APPROVED BY: William E. Lyman	LATERAL CLEANOUT
MARK / DATE / REVISION		WILLIAM E. LYMAN	

FIGURE S-6

NOTES:

1. INSIDE DROP MANHOLES ALLOWED WHEN THE GRADE DIFFERENCE IS 6' OR MORE ON EXISTING FACILITIES OR WHEN DIRECTED BY THE ENGINEER.
2. THIS TYPE DROP MANHOLE CONSTRUCTION MAY BE UTILIZED ONLY WHEN 8" OR SMALLER PIPE IS USED.
3. VERTICAL PIPE SHALL BE 6" FOR BOTH 6" AND 8" INCOMING LINES. 4" VERTICAL PIPE MAY BE USED FROM 4" INCOMING LINES.
4. CAST IRON SOIL PIPE SHALL BE USED IN THE DROP SECTION OF THE MANHOLE. USE NO HUB TEES.
5. A CALDER COUPLING OR EQUAL SHALL BE USED ON THE JOINT IMMEDIATELY OUTSIDE THE MANHOLE.
6. A MINIMUM OF ONE STAINLESS STEEL BRACKET PER JOINT OF PIPE SHALL BE USED. A MINIMUM OF TWO BRACKETS SHALL BE USED PER MANHOLE INSTALLATION.

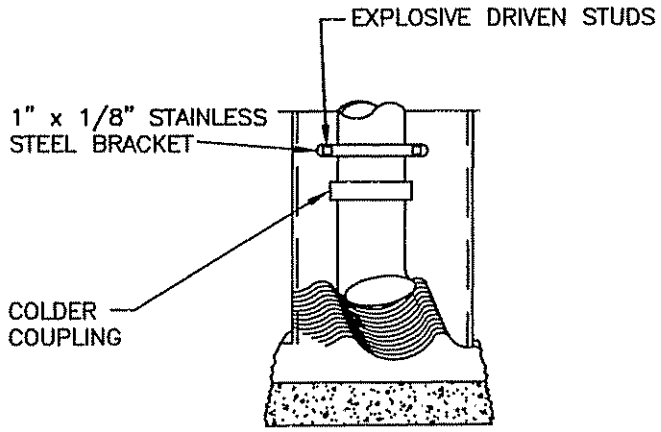

SECTION D-D

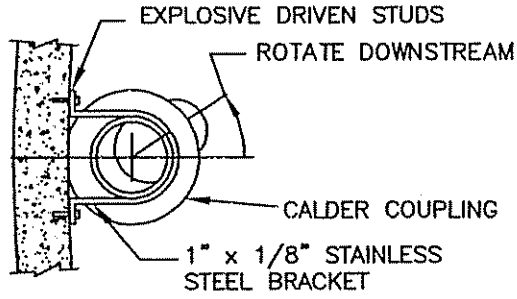

SECTION C-C

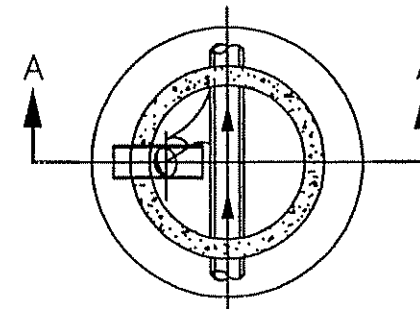

SECTION B--B

THIS STANDARD TO APPLY TO EXIST. MANHOLE ONLY

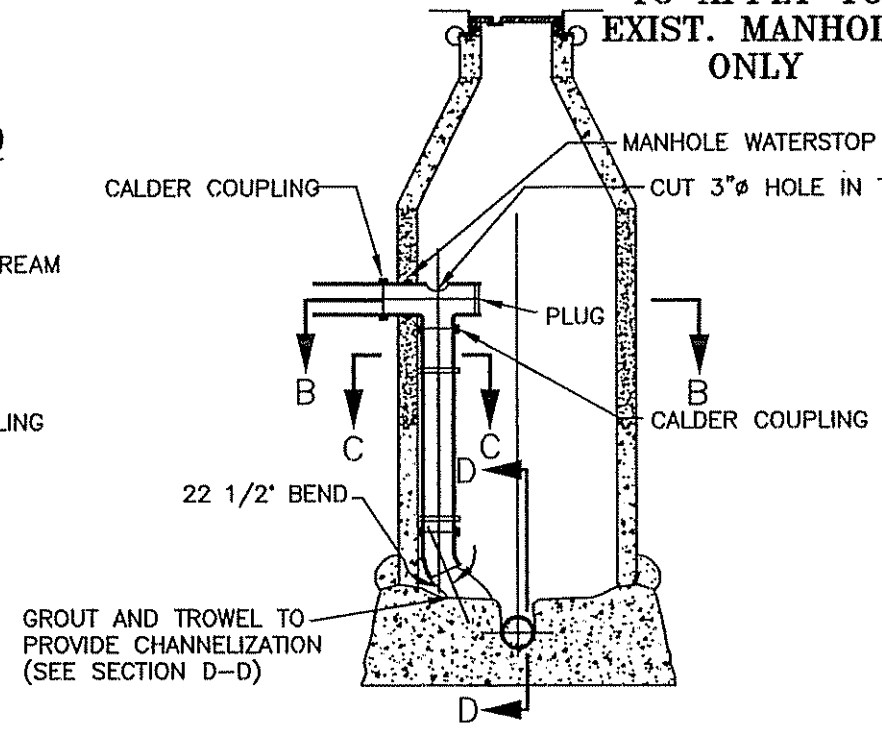

SECTION A-A

SCALE: NTS	DATE: JUNE 1996	• SHASTA COUNTY SERVICE AREAS •	
		APPROVED BY: William E. Lyman	STANDARD INSIDE DROP MANHOLE
MARK / DATE / REVISION		WILLIAM E. LYMAN	

FIGURE S-7

ACCEPTABLE MANUFACTURERS

SOUTH BAY FOUNDRY
SFB 1900 CPH
COVER 130 lbs
FRAME 140 lbs

D AND L SUPPLY
D&L A-1024
COVER 130 lbs
FRAME 150 lbs

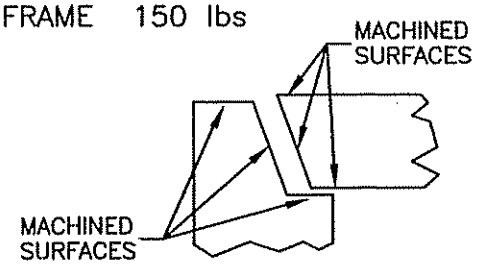

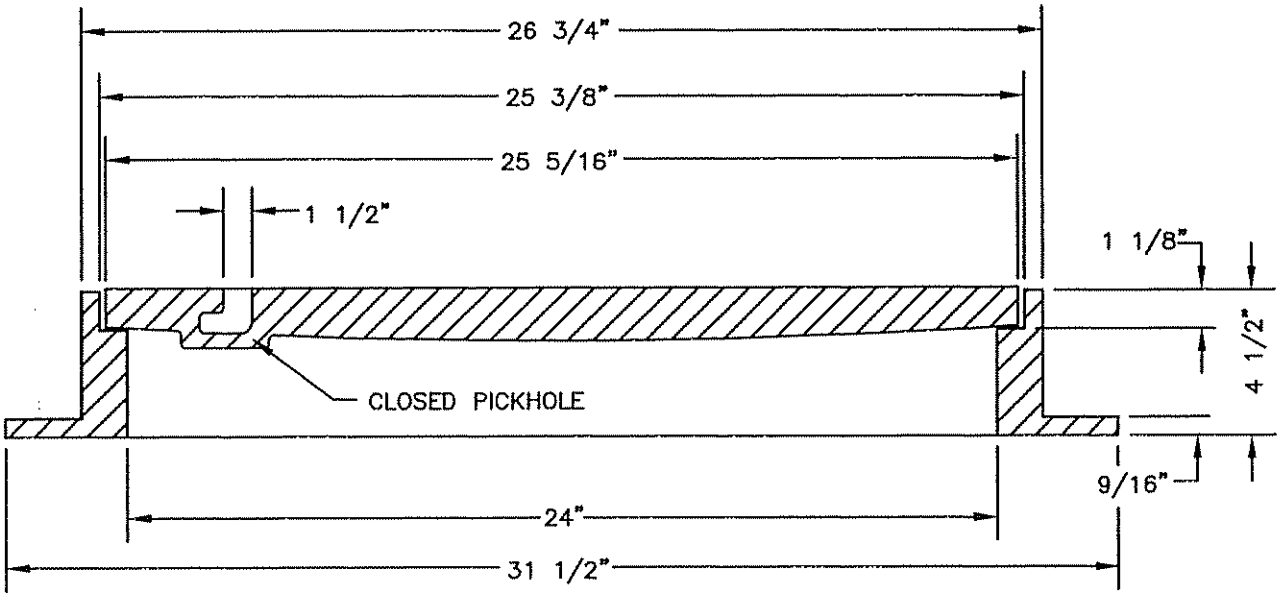

LID SECTION

NOTES:

1. FRAME AND COVER FULLY MACHINED ON SURFACES AS SHOWN FOR PERFECT NO-ROCK, NO-STICK FIT.
2. STANDARD COVER MARKINGS "SANITARY SEWER". CASTING SHALL BE ORDERED WITH APPROPRIATE MARKING.
3. CASTING SHALL BE FURNISHED WITH BLIND PICKHOLES.
4. CASTINGS SHALL BE DIPPED IN ASPHALT PAINT.
5. ALL PARTS OF ACCEPTABLE ASSEMBLIES ARE INTERCHANGEABLE.

SCALE: NTS	DATE: JUNE 1996	• SHASTA COUNTY SERVICE AREAS •	
		APPROVED BY: William E. Lyman	24 INCH MANHOLE COVER ASSEMBLY (STREET TYPE)
MARK / DATE / REVISION		WILLIAM E. LYMAN	

FIGURE S-8

NOTES:

1. ALL CONCRETE SHALL BE CLASS 520-C-2500.
2. CONCRETE COLLAR AROUND RODHOLE FRAME SHALL BE OVAL IN SHAPE TO MATCH FRAME ASSEMBLY.

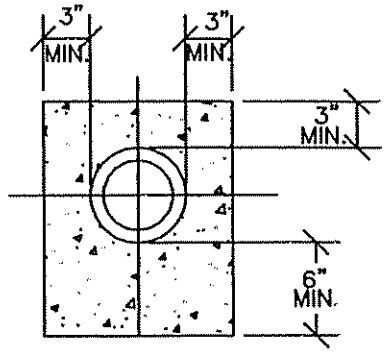

SECTION A-A

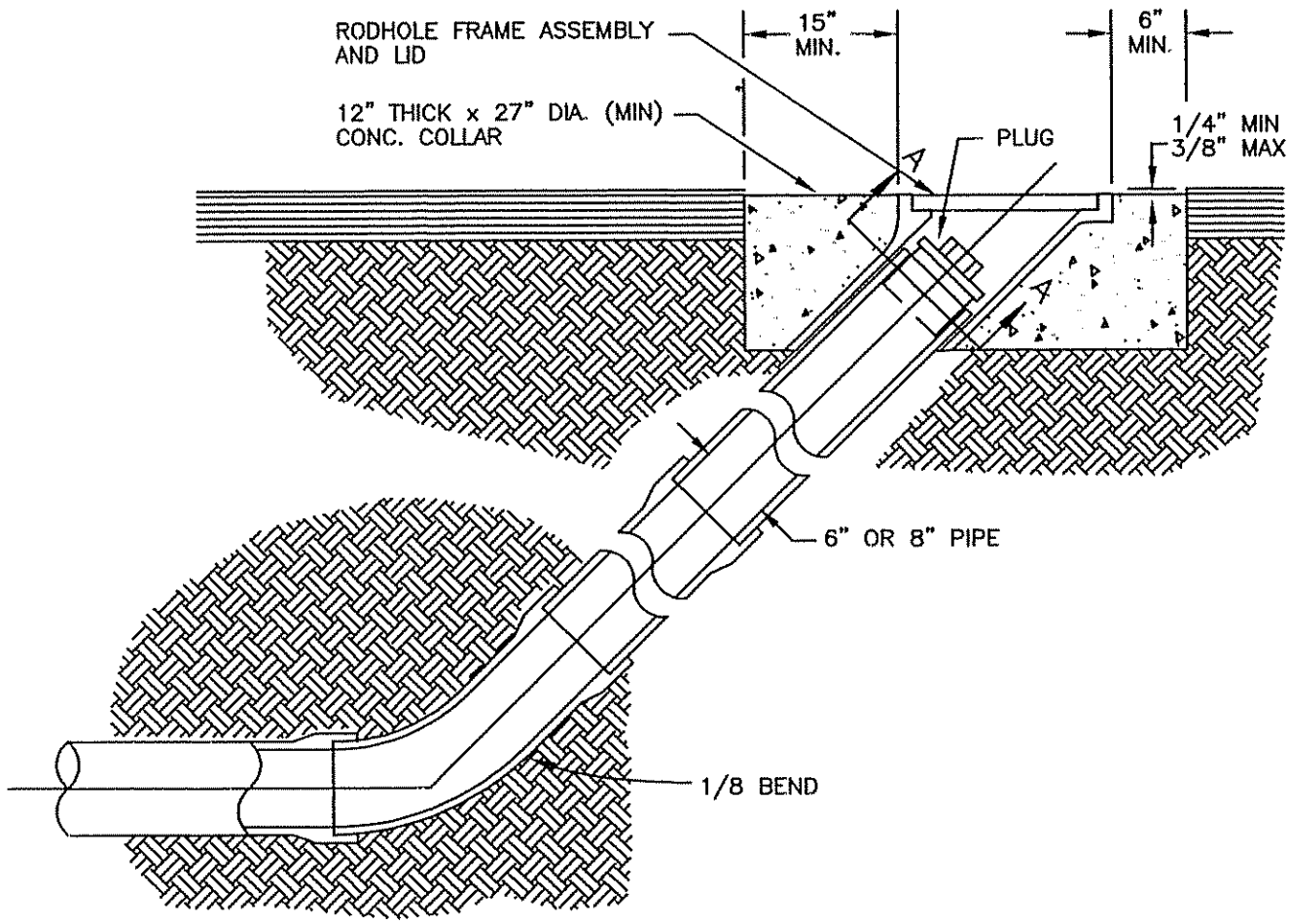

SCALE: NTS	DATE: JUNE 1996	• SHASTA COUNTY SERVICE AREAS •	
		APPROVED BY: William E. Lyman	RODHOLE INSTALLATION
MARK / DATE / REVISION		WILLIAM E. LYMAN	

FIGURE S-9

PINKERTON FOUNDRY NO. A-211 OR EQUAL.
FRAME PART NO. A-212 APPROX. WT. 104 LBS.
COVER PART NO. A-213 APPROX. WT. 22 LBS.

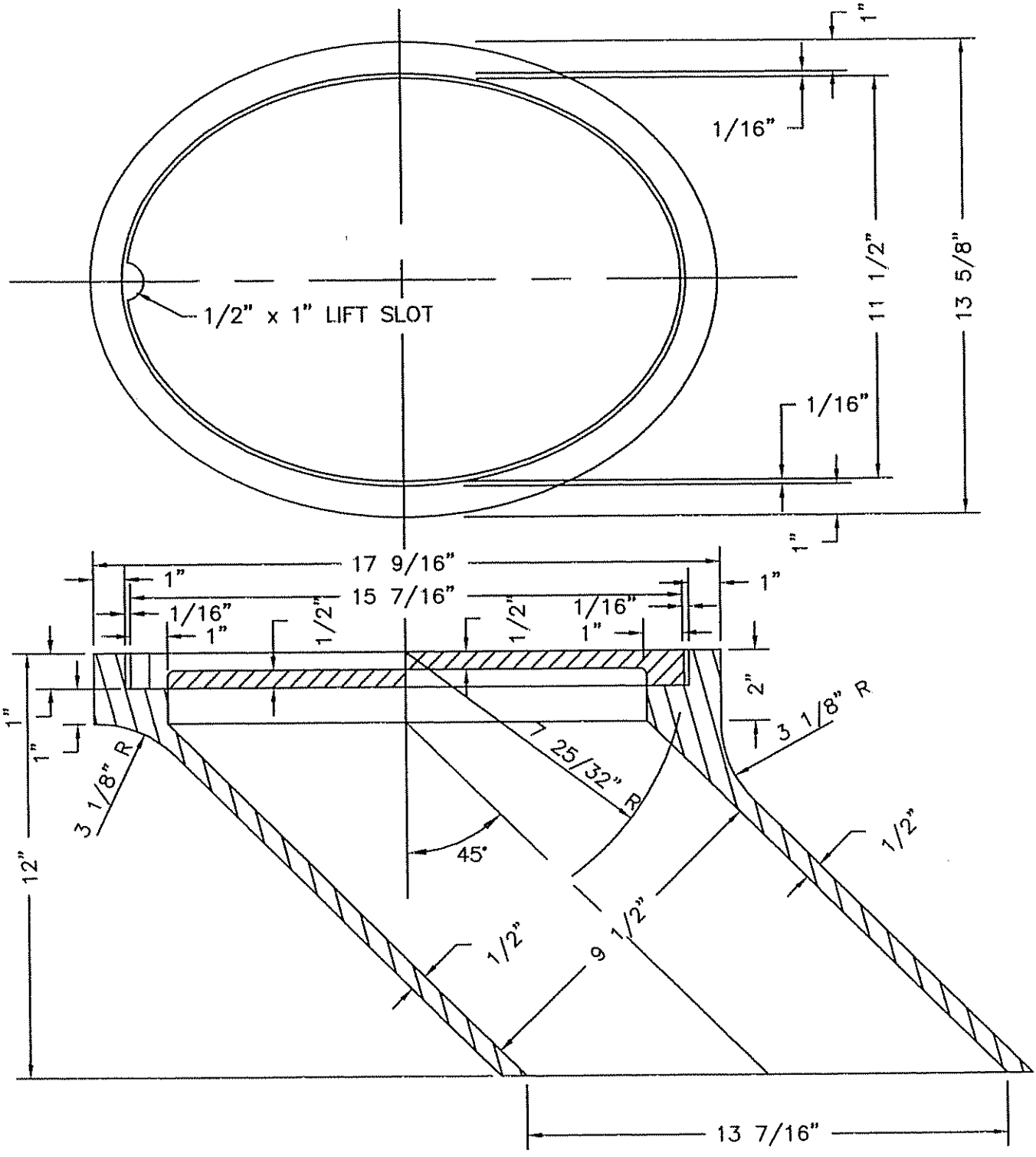

SCALE: NTS	DATE: JUNE 1996	• SHASTA COUNTY SERVICE AREAS •
MARK / DATE / REVISION	APPROVED BY: William E. Lyman, WILLIAM E. LYMAN	RODHOLE FRAME AND COVER ASSEMBLY (6" SLOPE TYPE)

FIGURE
S-9A

PINKERTON FOUNDRY NO. A-372 OR EQUAL
FRAME PART NO. A-373 APPROX. WT. 135 lbs.
COVER PART NO. A-374 APPROX. WT. 45 lbs.

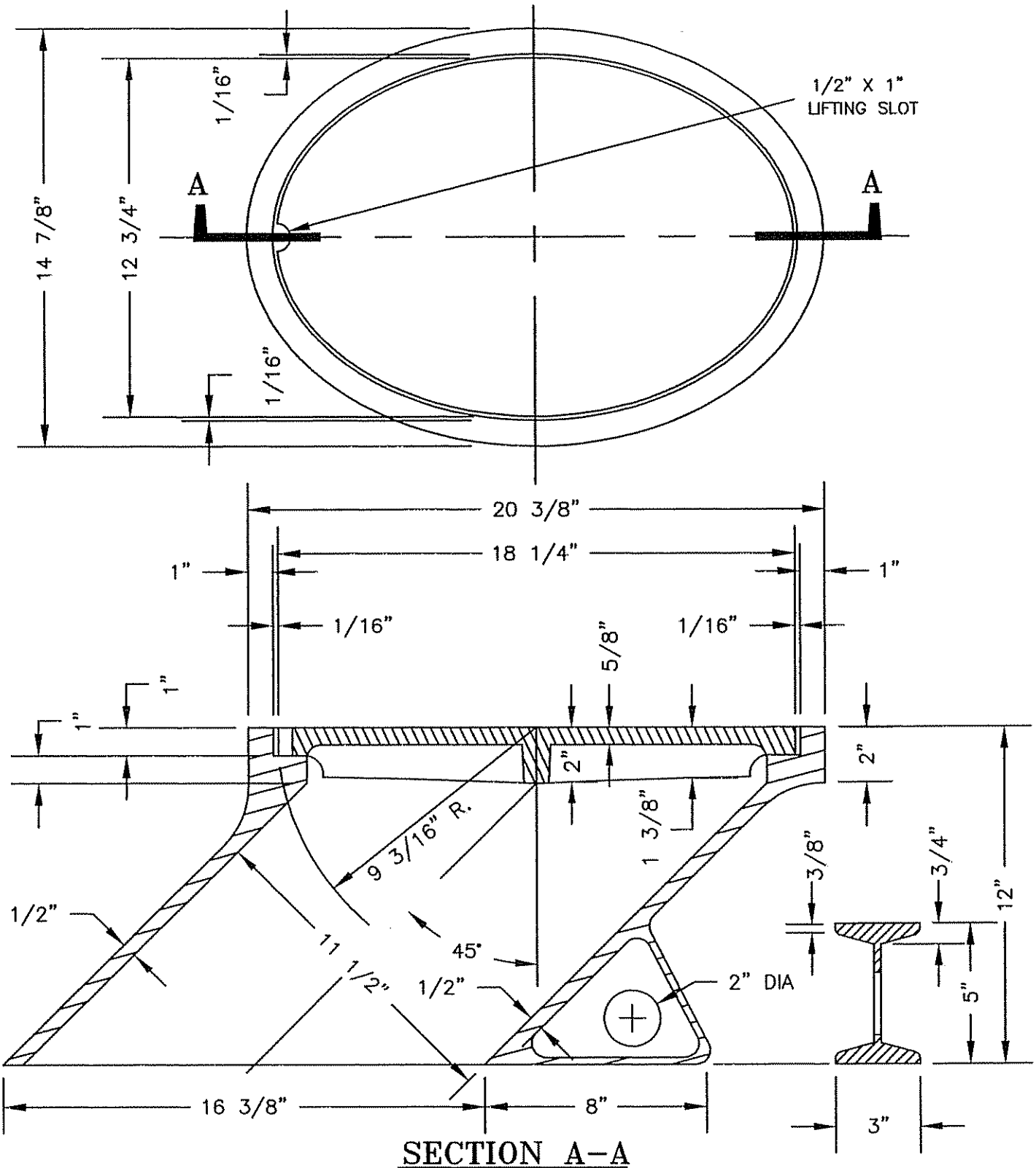

SECTION A-A

SCALE: NTS	DATE: JUNE 1996	• SHASTA COUNTY SERVICE AREAS •
MARK / DATE / REVISION	APPROVED BY: William E. Lyman, WILLIAM E. LYMAN	RODHOLE FRAME AND COVER ASSEMBLY (8" SLOPE TYPE)

FIGURE
S-10

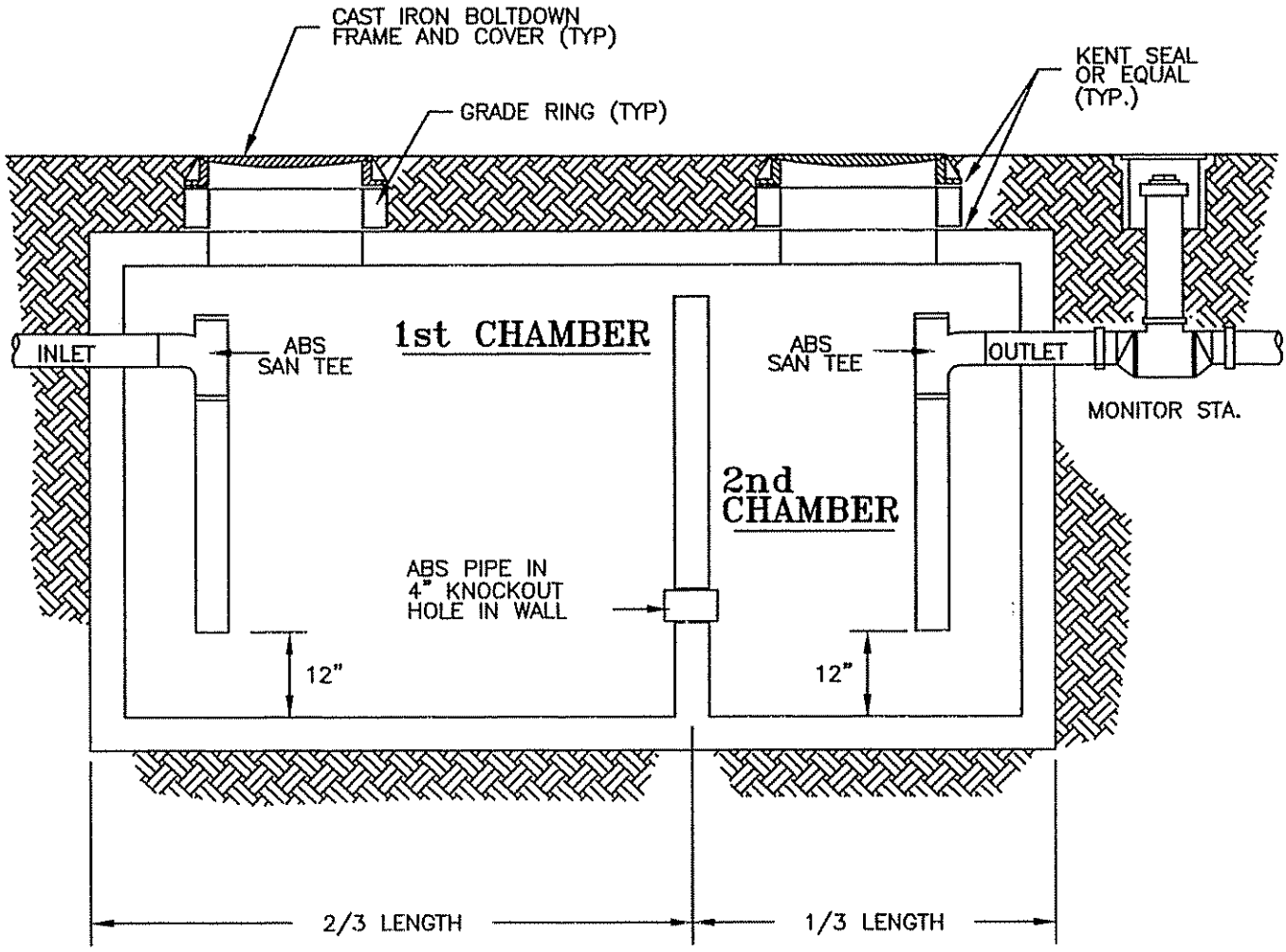

SCALE: NTS	DATE: JUNE 1996	• SHASTA COUNTY SERVICE AREAS •	
		APPROVED BY:	OIL AND GREASE INTERCEPTOR (OGI)
MARK / DATE / REVISION		WILLIAM E. LYMAN	

FIGURE S-10A

SHASTA COUNTY SERVICE AREA

OIL AND GREASE INTERCEPTORS (OGI)

REQUIREMENT:

Oil and Grease Interceptors are required for all industrial and for commercial food establishments where pretreatment of wastewater effluent is indicated as necessary to capture greases, oils, or food solids.

This standard applies to all new construction, tenant improvements, remodels, and existing systems which are in need of upgrading.

OGI's will be sized from industry submitted, certified food preparation facility survey information. The sizing criteria will follow the Uniform Plumbing Code (UPC) appendix H. The interceptor size (in gallons) will be established by the formula below.

SIZING CRITERIA:

(a) Parameters; The parameters for sizing a grease interceptor are hydraulic loading and grease storage capacity, for one or more fixtures.

(b) Sizing Formula; The size of the interceptor shall be determined by the following formula:

Number of meals per peak hour* X waste flow rate** X retention time*** X storage factor**** = interceptor size (liquid capacity)

* Meals Served at Peak Hour (or), Total Seating Capacity

** Waste Flow Rate:

a.	With dishwashing machine	6 gallon flow
b.	Without dishwashing machine	5 gallon flow
c.	Single service kitchen	2 gallon flow
d.	Food waste disposer	1 gallon flow

*** Retention Times

Commercial kitchen waste dishwasher	2.5 hours
Single service kitchen single serving	1.5 hours

**** Storage Factors

Fully equipped commercial kitchen	8 hour operation : 1 16 hour operation: 2 24 hour operation: 3
Single Service Kitchen	1.5

SCALE: NTS	DATE: SEPT 1996	• SHASTA COUNTY SERVICE AREAS •	
		APPROVED BY: William E. Lyman	OIL AND GREASE INTERCEPTORS (OGI)
MARK / DATE	REVISION	WILLIAM E. LYMAN	

FIGURE
S-10B

The minimum size OGI allowed by the County is 1250 gallons. For very large OGI requirements the maximum size required will be established on a case by case basis. Adjustments for extenuating circumstances will include establishment of an agreed upon OGI maintenance (pumping) schedule, between the facility owner/operator and the County.

DESIGN

All new construction and upgrades, having an OGI requirement, shall be constructed to include a sample monitoring station.

Facilities required to install OGI's and/or sample monitoring stations, shall install units of approved designs on file with the County Construction Standards.

If an existing undersized unit is structurally sound and installed properly, then, in lieu of replacing it with a larger unit, the owner may choose to install an additional unit in series with the existing unit to satisfy the total size capacity required.

All required OGI's shall be installed and properly maintained with all internal required plumbing of proper design and length in place at all times.

SCALE: NTS	DATE: SEPT 1996	• SHASTA COUNTY SERVICE AREAS •	
		APPROVED BY:	OIL AND GREASE INTERCEPTORS (OGI)
MARK / DATE / REVISION		WILLIAM E. LYMAN	

FIGURE
S-11

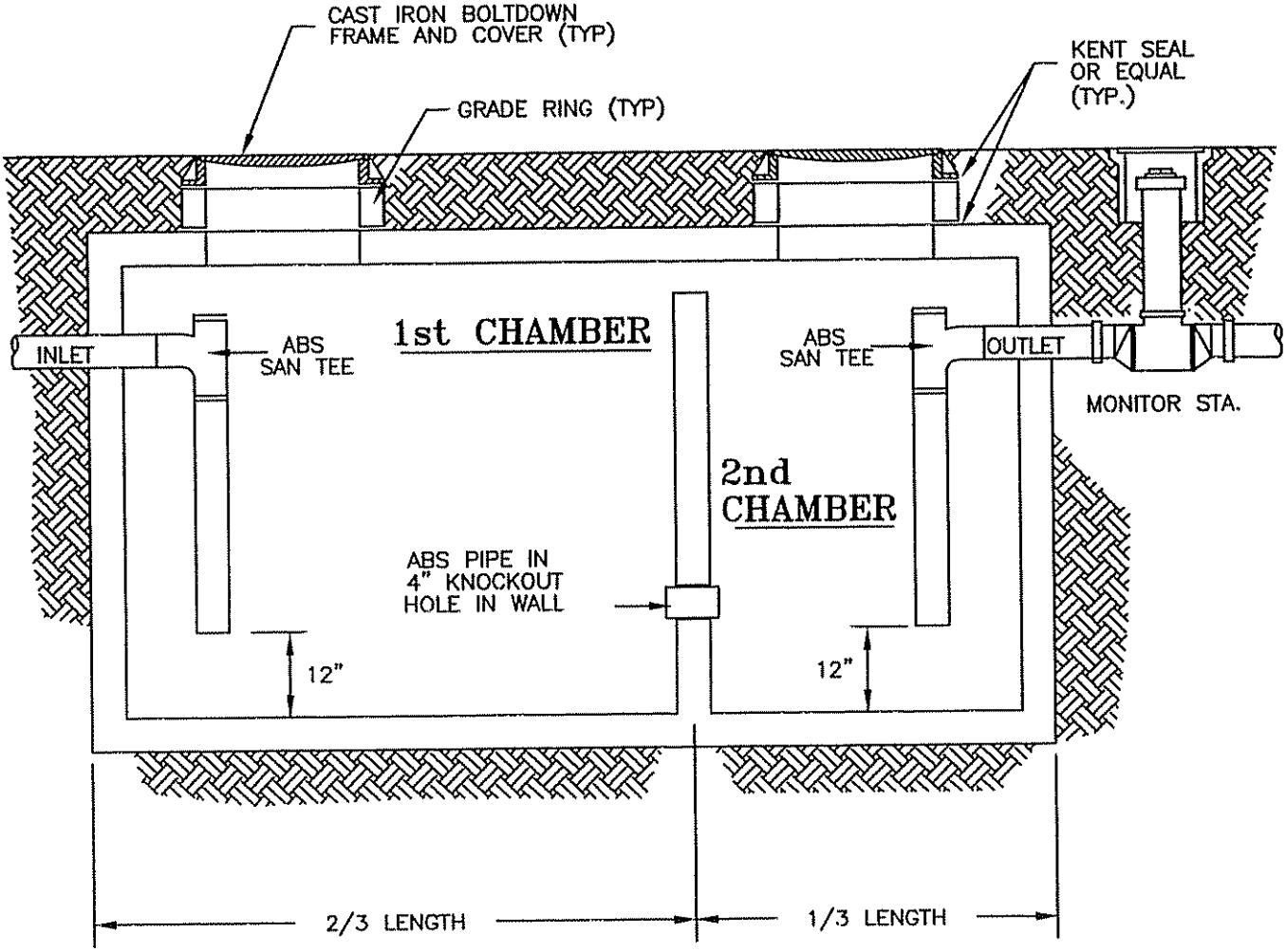

SCALE: NTS	DATE: JUNE 1996	• SHASTA COUNTY SERVICE AREAS •
		APPROVED BY: William E. Lyman WILLIAM E. LYMAN
MARK	DATE	REVISION

SAND AND OIL INTERCEPTOR (SOI)

FIGURE S-11A

SHASTA COUNTY SERVICE AREA

SAND AND OIL INTERCEPTORS (SOI)

REQUIREMENT:

Sand and Oil Interceptors are required for industrial and commercial establishments where pretreatment of wastewater effluent is necessary to capture solids (sand, silts etc.) or floatables (oils etc.).

This standard applies to all new construction, tenant improvements, remodels, and existing systems which are in need of upgrading.

SOI's will be sized from industry submitted, certified Industrial Waste Survey information or by County field inspection data. The sizing criteria will follow the Plumbing Code (UPC) appendix I-9. The UPC does not specify requirements for all specific applications; however, The basic formula may be easily adapted to differing applications or parameters.

SIZING CRITERIA:

(a) Parameters; The parameters for sizing the SOI units are hydraulic loading, retention time, and storage factor for one or more fixtures or industrial applications.

(b) Sizing Formula; The size of the SOI will be determined by use of the following formula:

Number of units washed per hour* X waste flow rate** X retention time*** X storage factor**** = interceptor size (liquid capacity)

* NUMBER of units washed per hour (ie.,auto's, engines, parts, etc.)

** Waste Flow Rate – gallons per unit cleaned (for intermittent use), or gallons per hour (for constant use)

*** Retention Times 2.0 hours

**** Storage Factors – vehicle/equipment/parts, etc. washing

a.	Self service/public	1.5 hours
b.	Employee operated automated/commercial	2.0 hours
c.	Other industrial/commercial applications	2.0 hours

The minimum size SOI allowed by the County is 100 gallons. Adjustments for extenuating circumstances will include establishment of an agreed upon SOI maintenance (pumping) schedule, between the facility owner/operator and the County.

SCALE: NTS	DATE: SEPT 1996	• SHASTA COUNTY SERVICE AREAS •	
		APPROVED BY: William E. Lyman	SAND AND OIL INTERCEPTORS (SOI)
MARK / DATE / REVISION		WILLIAM E. LYMAN	

FIGURE
S-11B

DESIGN

All new construction and upgrades, where SOI's are required, such units shall be constructed to include a sample monitoring station.

Facilities required to install SOI's and/or sample monitoring stations, shall install units of approved designs on file with the County Construction Standards. The use of auxiliary or alternate pretreatment systems in conjunction with or in lieu of an SOI unit must be approved by the County prior to installation.

If an existing undersized unit is structurally sound and installed properly, then, in lieu of replacing it with a larger unit, the owner may choose to install an additional unit in series with the existing unit to satisfy the total size capacity required.

The standard SOI drawing (Figure S-11) applies to units of 100 through 1,500 gallon capacity. Units over 1,500 gallon capacity must have at least 3 compartments.

All required SOI's shall be installed and properly maintained with all internal required plumbing of proper design and length in place at all times.

SCALE: NTS	DATE: SEPT 1996	• SHASTA COUNTY SERVICE AREAS •	
		APPROVED BY: William E. Lyman	SAND AND OIL INTERCEPTORS (SOI)
MARK / DATE	REVISION	WILLIAM E. LYMAN	

FIGURE S-12

NOTE:
MONITOR STATION MUST BE LEVEL.

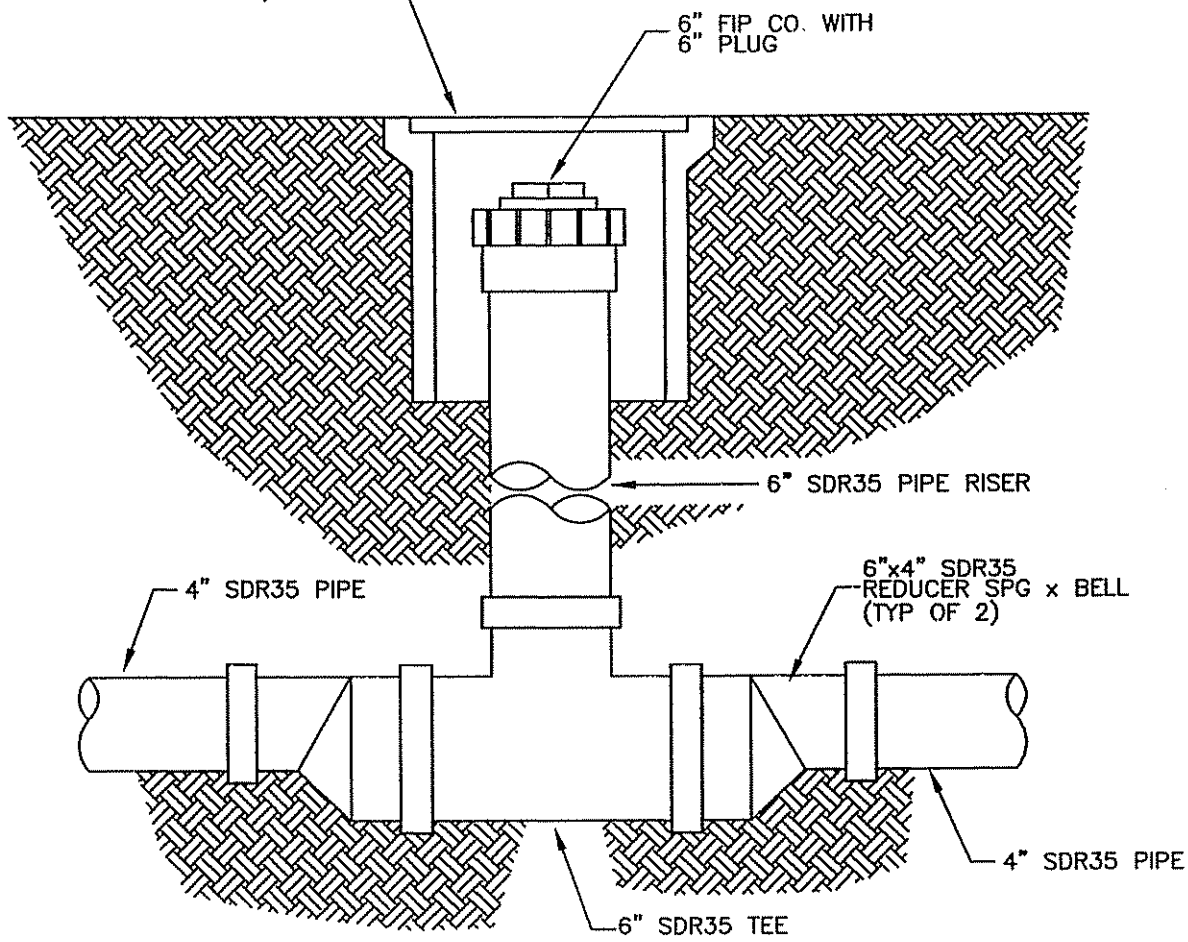

PARTS LIST

1	———	6" SDR35 TEE
2	———	6"x4" SDR35 REDUCER (SPG x BELL)
1	———	6" FIP COLLAR
1	———	6" PLUG
1	———	G5 CONC. BOX
1	———	G5 SEWER LID

IF REQUIRED

1	———	4" ABS CPLG
1	———	4" ABS x SDR BUSHING

SCALE: NTS	DATE: JUNE 1996	• SHASTA COUNTY SERVICE AREAS •	
		APPROVED BY: William E. Lyman	INTERCEPTOR MONITOR STATION
MARK / DATE / REVISION		WILLIAM E. LYMAN	

FIGURE W-1

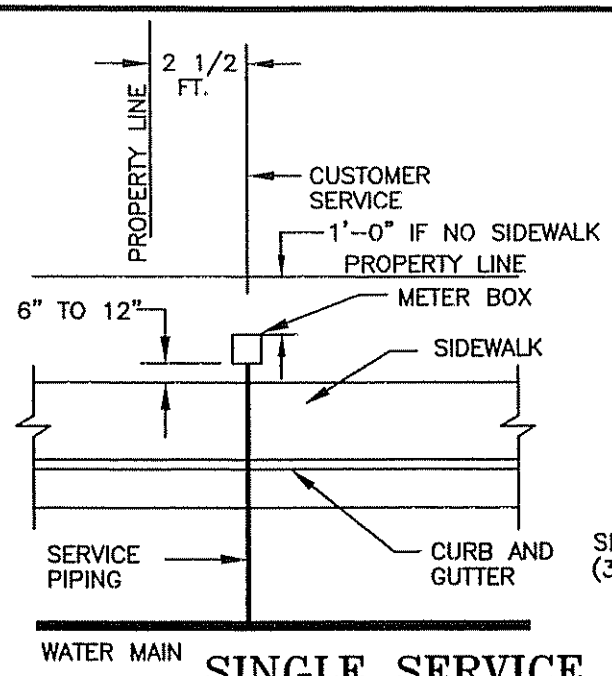

SINGLE SERVICE

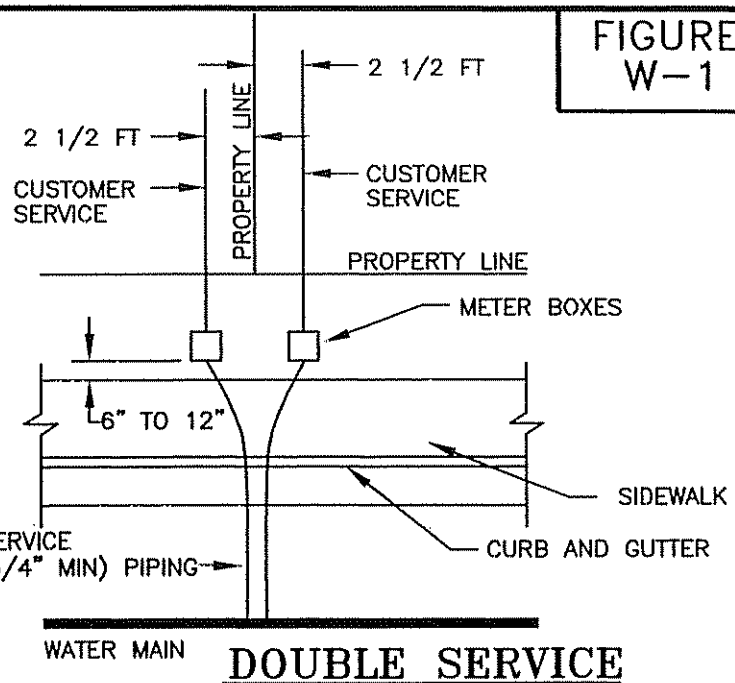

DOUBLE SERVICE

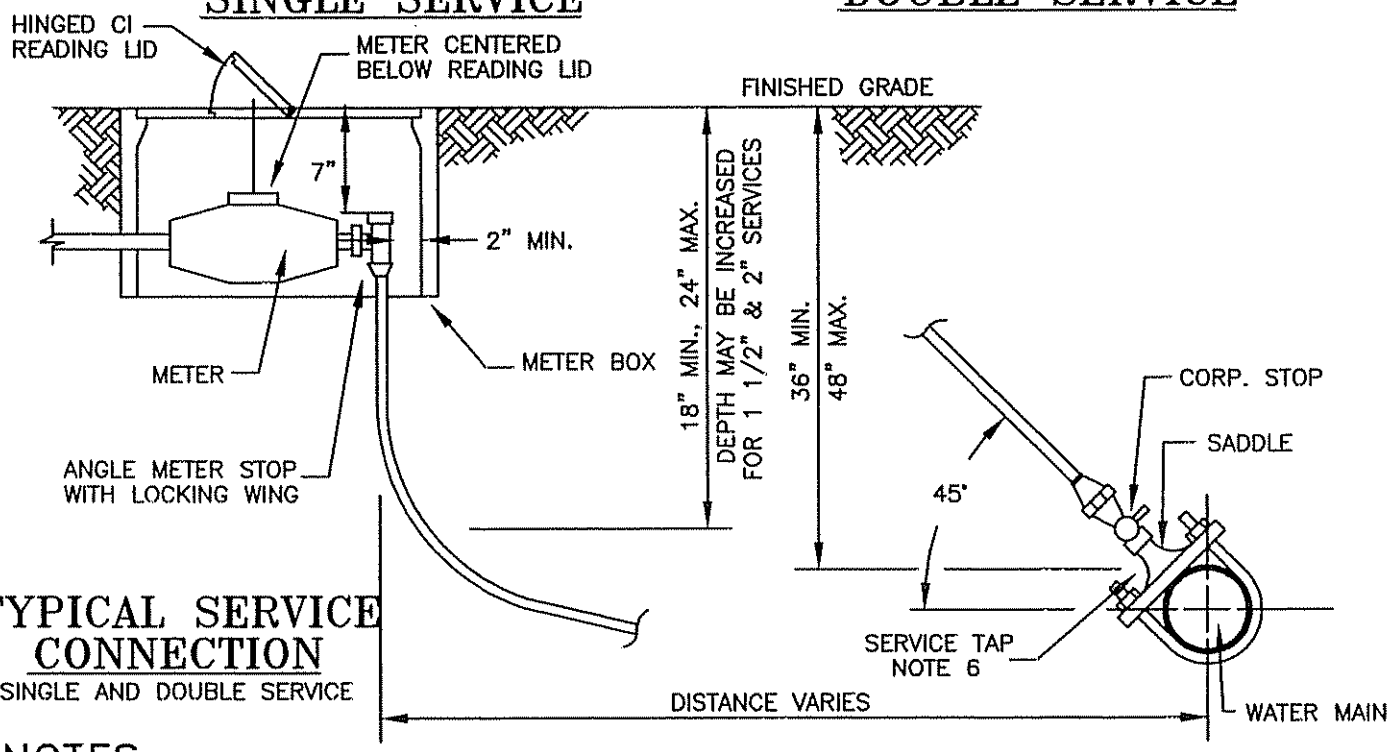

TYPICAL SERVICE CONNECTION

SINGLE AND DOUBLE SERVICE

NOTES:

1. STANDARD METER SIZE SHALL BE 3/4" x 5/8", FOR 3/4" SERVICE.
2. OTHER SERVICE SIZES THRU 2" SHALL HAVE THE SAME SIZE METER AS THE SERVICE LINE SIZE INCLUDING FULL 3/4" SERVICE.
3. METER BOXES SHALL HAVE CONCRETE LIDS (STEEL TRAFFIC LIDS IN DRIVEWAYS, SHOULDERS, PARKING AREAS, OR AREAS WITH ROLL CURB) WITH HINGED CI. READING LIDS.
4. ANGLE METER STOP VALVE SHALL BE POSITIONED IN METER BOX SO THAT METER REGISTER WILL BE CENTERED UNDER READING LID.
5. METER BOXES AND SERVICE PIPING SHALL BE INSTALLED WITH A MINIMUM OF 2 1/2 FT. CLEARANCE FROM ALL ELECTRICAL TRANSFORMERS, LIGHT STANDARDS AND OTHER UTILITY BOXES OR VAULTS.
6. ONLY SERVICE TAPS FOR 1 1/2" AND 2" MAY BE TAPPED OTHER THAN AT A 45° ANGLE, BUT ONLY WITH PRIOR APPROVAL OF THE COUNTY.

SCALE: NTS	DATE: JUNE 1996	• SHASTA COUNTY SERVICE AREAS •	
		APPROVED BY: William E. Lyman	WATER SERVICE CONNECTION SINGLE / DOUBLE 3/4" THRU 2"
MARK / DATE / REVISION		WILLIAM E. LYMAN	

FIGURE
W-2

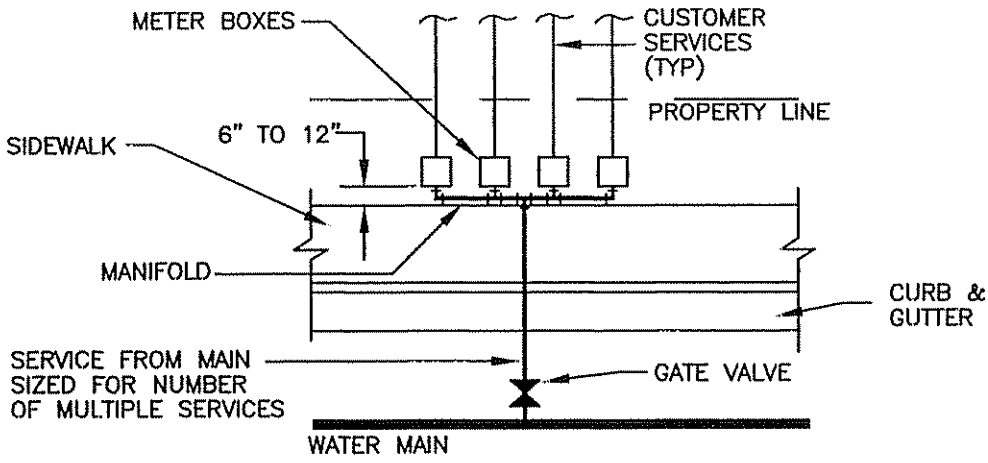

TYPICAL MULTIPLE SERVICE

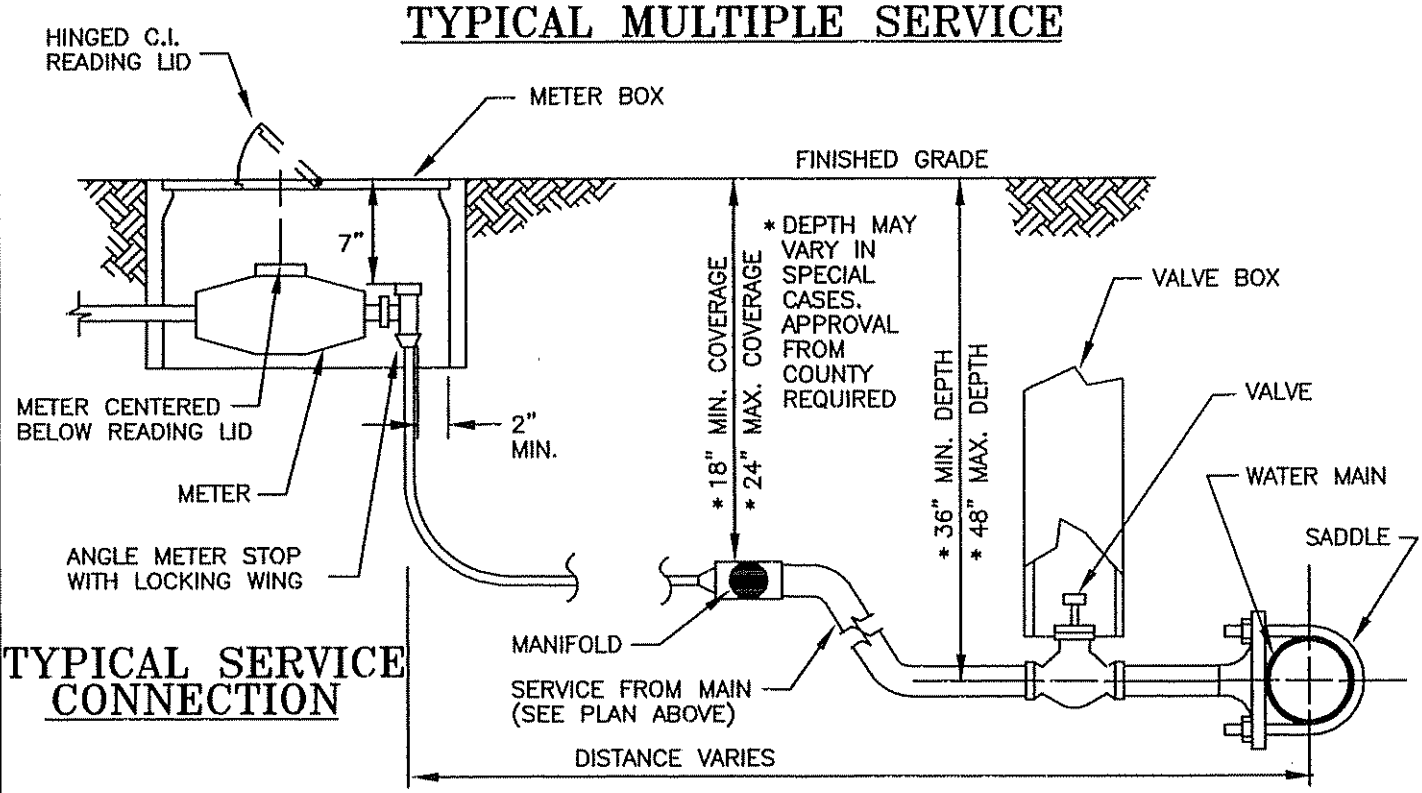

TYPICAL SERVICE CONNECTION

NOTES

1. REFER TO NOTES ON FIGURE W-1.
2. MANIFOLD TO BE SAME SIZE AS SERVICE FROM MAIN.

SCALE: NTS	DATE: JUNE 1996	• SHASTA COUNTY SERVICE AREAS •
		APPROVED BY: William E. Lyman
MARK / DATE / REVISION		WILLIAM E. LYMAN

WATER SERVICE CONNECTION

3/4" THRU 2" (3 SERVICES OR MORE)

FIGURE W-3

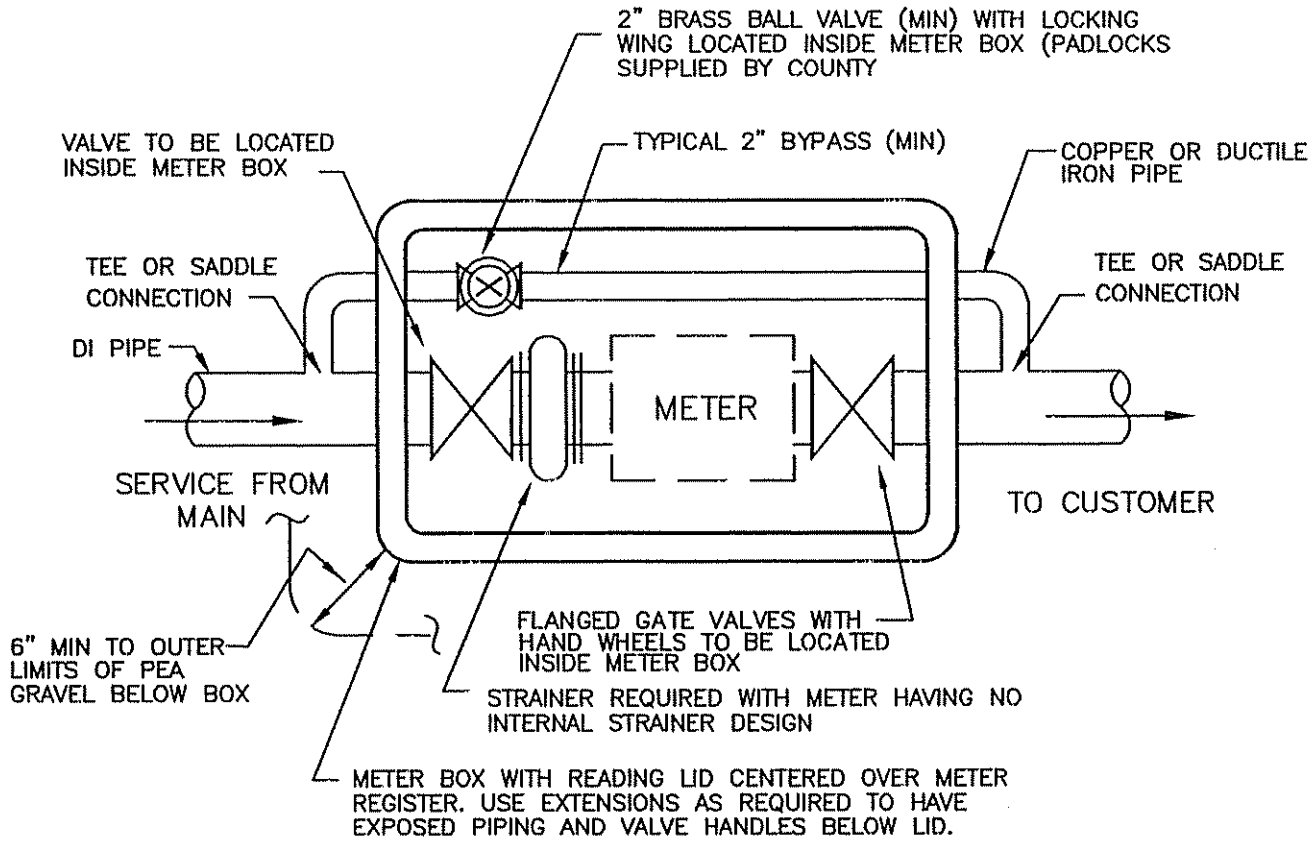

TYP. BYPASS INSTALLATION

3 INCH AND LARGER

NOTES:

1. MAXIMUM DEPTH OF METER REGISTER TO BE TWENTY FOUR (24) INCHES.
   NOTE: ALL METERS WHICH, DUE TO PLUMBING PROBLEMS, CANNOT BE RAISED TO MEET THE ABOVE DEPTH LIMIT SHALL HAVE A REMOTE READ OR REGISTER EXTENSION. ITEMS TO BE SUPPLIED BY CUSTOMER AND APPROVED BY THE COUNTY.
2. ALL VAULTS FOR 3" AND LARGER SERVICES REQUIRE 12" MIN PEA GRAVEL DEPTH BELOW BOX
3. COPPER BYPASS TO BE DIELECTRICALLY SEPARATED FROM DI SADDLE OR TEE USING UNION OR NYLON BUSHING.
4. METER TYPE TO BE APPROVED BY COUNTY BASED ON CONDITIONS OF USAGE.
5. METER TO BE REMOVEABLE BY METER COUPLINGS OR FLANGED COUPLING ADAPTERS.

SCALE: NTS	DATE: JUNE 1996	• SHASTA COUNTY SERVICE AREAS •	
		APPROVED BY: William E. Lyman	WATER SERVICE CONNECTION METER & BYPASS DETAIL 3" SERVICES & LARGER
MARK / DATE	REVISION	WILLIAM E. LYMAN	

FIGURE
W-4

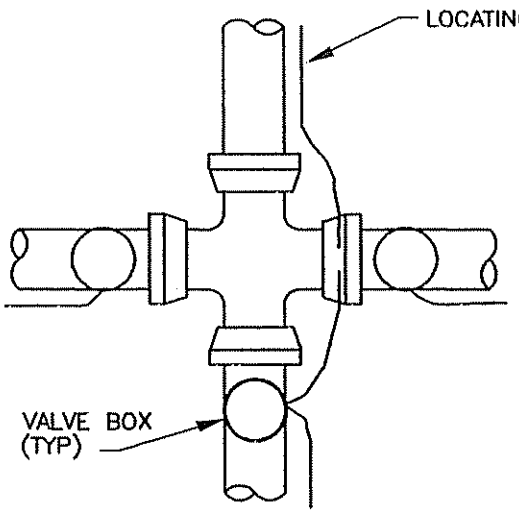

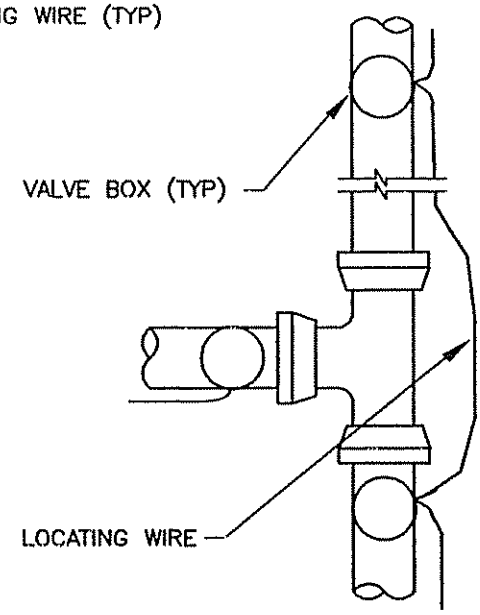

NOTICE:

LOCATING WIRE SHALL BE INSTALLED WITH ALL NON-METALLIC MAINS AND OFF STREET FIRE SERVICES & HYDRANTS

LOCATING WARNING TAPE SHALL BE INSTALLED 12" ABOVE ALL WATER MAINS IN OFFROAD INSTALLATIONS IN ADDITION TO LOCATING WIRE.

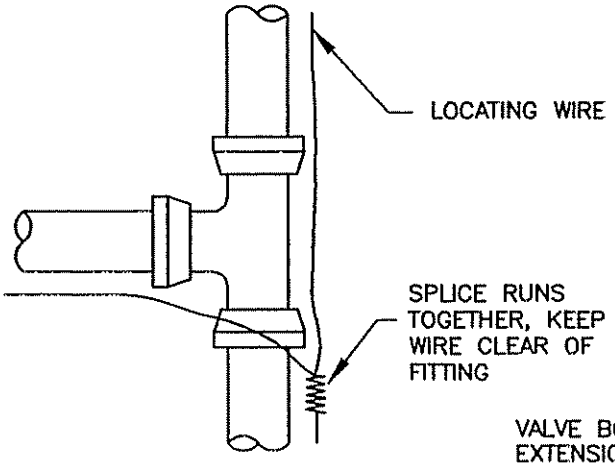

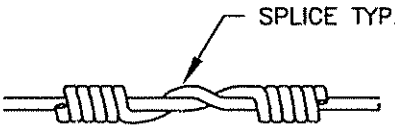

SPLICE DETAIL

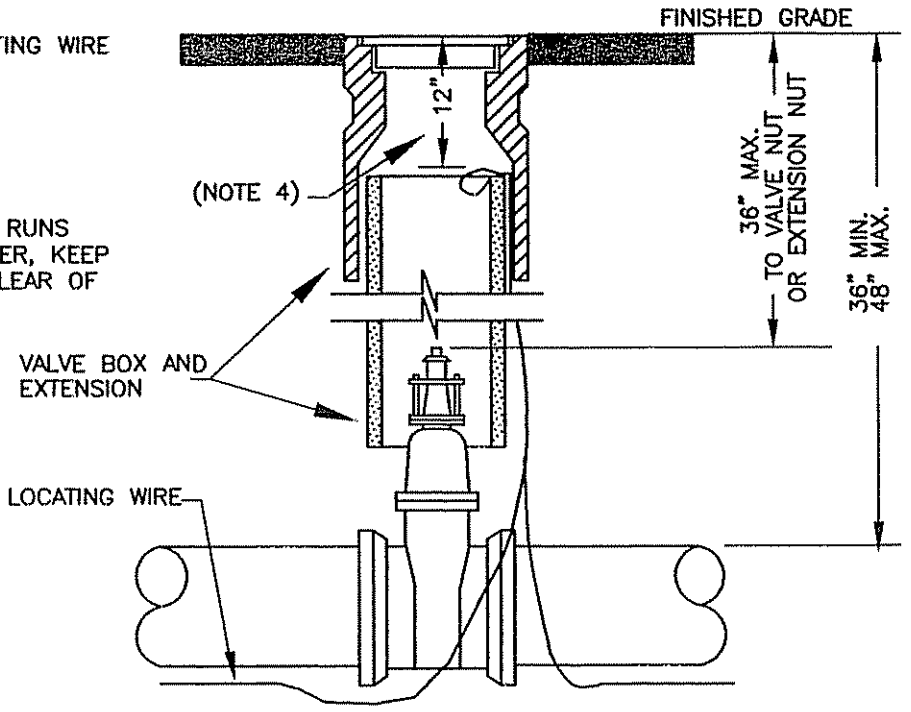

DETAIL AT BOX

NOTES:

1. BARE WIRE SHALL NOT TOUCH VALVE OR FITTINGS (MAINTAIN 3 INCHES CLEAR DISTANCE)
2. LOCATING WIRE SHALL BE PLACED AT BOTTOM OF TRENCH, NEXT TO PIPE. (DO NOT ATTACH WIRE TO PIPE)
3. ALL VALVES, INCLUDING FIRE HYDRANT VALVES, SHALL HAVE LOCATING WIRES.
4. LOCATING WIRE SHALL BE INSULATED, #10 COPPER.

SCALE: NTS	DATE: JUNE 1996	• SHASTA COUNTY SERVICE AREAS •	
		APPROVED BY: William E. Lyman	LOCATING WIRE WARNING TAPE
MARK / DATE / REVISION		WILLIAM E. LYMAN	

FIGURE W-5

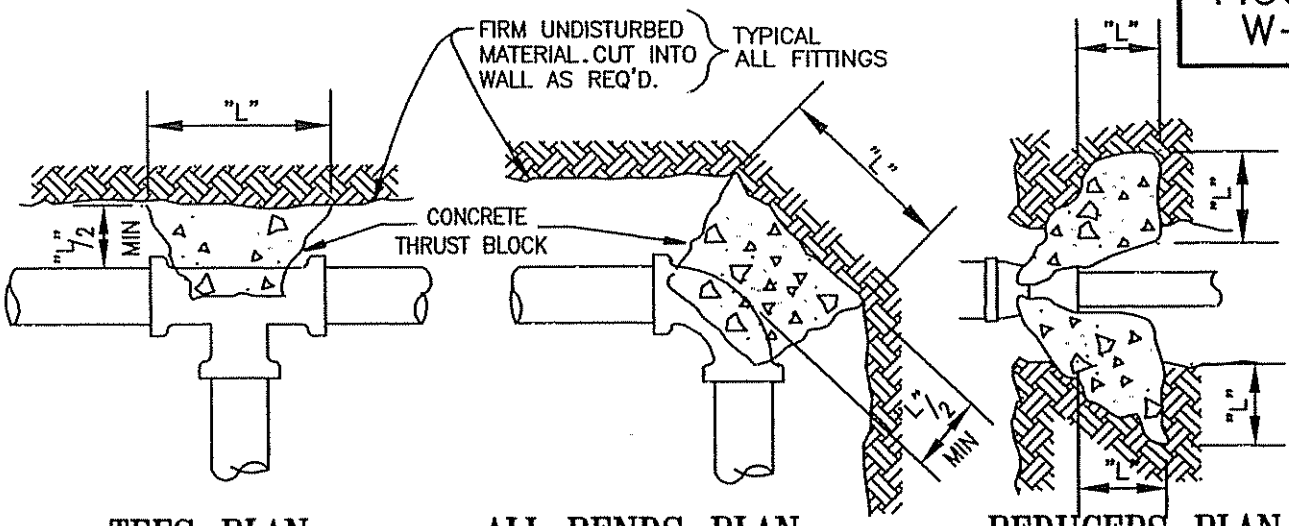

TEES–PLAN

ALL BENDS–PLAN

REDUCERS–PLAN

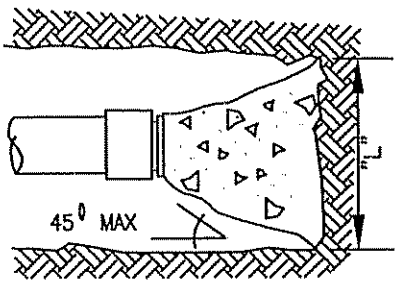

CAP OR PLUG PLAN

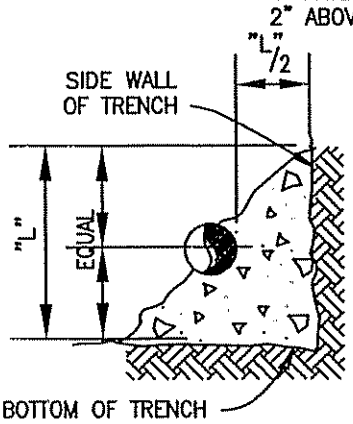

ALL FITTINGS SECTION

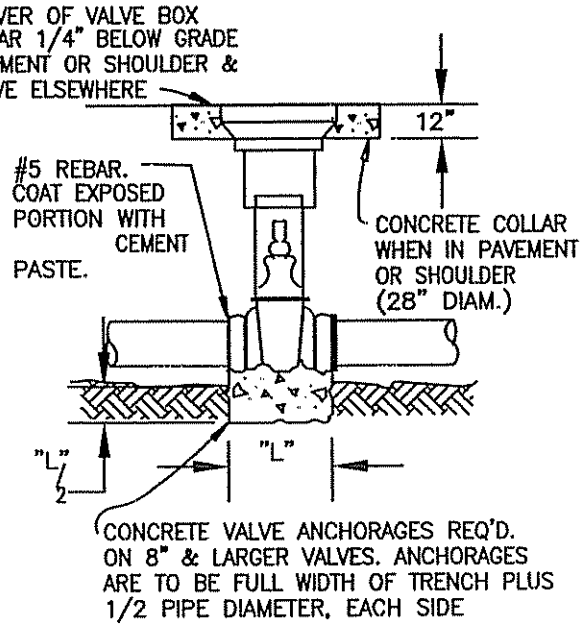

VALVE INSTALLATION ELEVATION

NOTES:

1. THRUST BLOCKS SHALL BE PROVIDED AT ALL BURIED PIPE FITTINGS OF 4" DIA OR LARGER. THRUST BLOCK SIZE IS BASED ON PIPE SIZE, 150 PSI TEST PRESSURE, & SOIL BEARING OF 1200 LB/FT . DIMENSION "L" IS SHOWN IN TABLE 1 & IS BOTH A VERTICAL & HORIZONTAL DIMENSION UNLESS SHOWN OTHERWISE. IF PIPE COVER HAS BEEN APPROVED TO BE LESS THAN 30", INCREASE HORIZONTAL THRUST BLOCKS IN PROPORTION TO 30 INCHES DIVIDED BY THE ACTUAL COVER.
2. SEE TABLE 1 ON FIGURE W-6 FOR "L" DIMENSIONS.

SCALE: NTS	DATE: JUNE 1996	• SHASTA COUNTY SERVICE AREAS •	
		APPROVED BY: WILLIAM E. LYMAN	THRUST BLOCK DETAILS
MARK / DATE / REVISION			

FIGURE W-6

TABLE 1

NOMINAL PIPE DIAMETER INCHES	FITTINGS						
	TEE, WYE, OR PLUG	90° BEND	45° BEND	22-1/2° BEND	11-1/4° BEND	REDUCER (BASED ON LARGEST DIA.)	VALVE
4"	18	22	16	15	15	--	--
6"	26	31	23	17	15	--	--
8"	34	40	30	21	15	17	12
10"	41	49	36	26	18	21	12
12"	49	59	44	31	22	25	16
14"	58	68	50	36	26	30	16
16"	66	77	57	41	28	33	18
18"	74	88	65	45	32	37	REQUIRES
20"	81	97	71	50	36	41	SPECIAL
24"	97	115	85	61	43	49	DESIGN

TABLE 2

VERTICAL FITTING THRUST BLOCKS

WHERE VERTICAL BENDS ARE DIRECTED WITH THE THRUST TOWARD THE BOTTOM OF THE TRENCH, THEY SHALL HAVE THRUST BLOCKS PER HORIZONTAL BENDS EXCEPT CONCRETE SHALL BEAR AGAINST THE TRENCH BOTTOM.

WHERE VERTICAL BENDS ARE DIRECTED WITH THE THRUST TOWARD THE TOP OF TRENCH, THEY SHALL BE INSTALLED PER THE FOLLOWING DETAIL. MINIMUM ROD EMBEDMENT SHALL BE 30 INCHES FOR 12" AND SMALLER PIPE AND 36 INCHES FOR 14" AND LARGER PIPE.

CUBIC YARDS CONCRETE FOR VERTICAL FITTINGS (SEE DETAIL BELOW)

BEND ANGLE	PIPE DIAMETER						
	4"	6"	8"	10"	12"	14"	16" AND OVER
11-1/4°	0	0.4	0.7	0.9	1.3	1.8	REQUIRES
22-1/2°	0.4	0.8	1.3	1.8	2.5	3.4	SPECIAL
45°	0.7	1.4	2.4	3.5	4.9	6.6	DESIGN
90°	1.3	2.5	4.3	4.3	9.1	12.2	

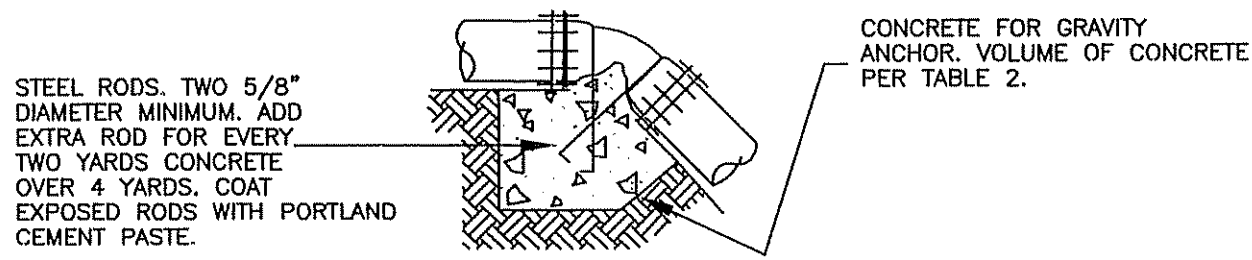

ELEVATION

SCALE: NTS	DATE: JUNE 1996	• SHASTA COUNTY SERVICE AREAS •	
		APPROVED BY: William E. Lyman	THRUST BLOCK TABLES
MARK / DATE / REVISION		WILLIAM E. LYMAN	

FIGURE W-7

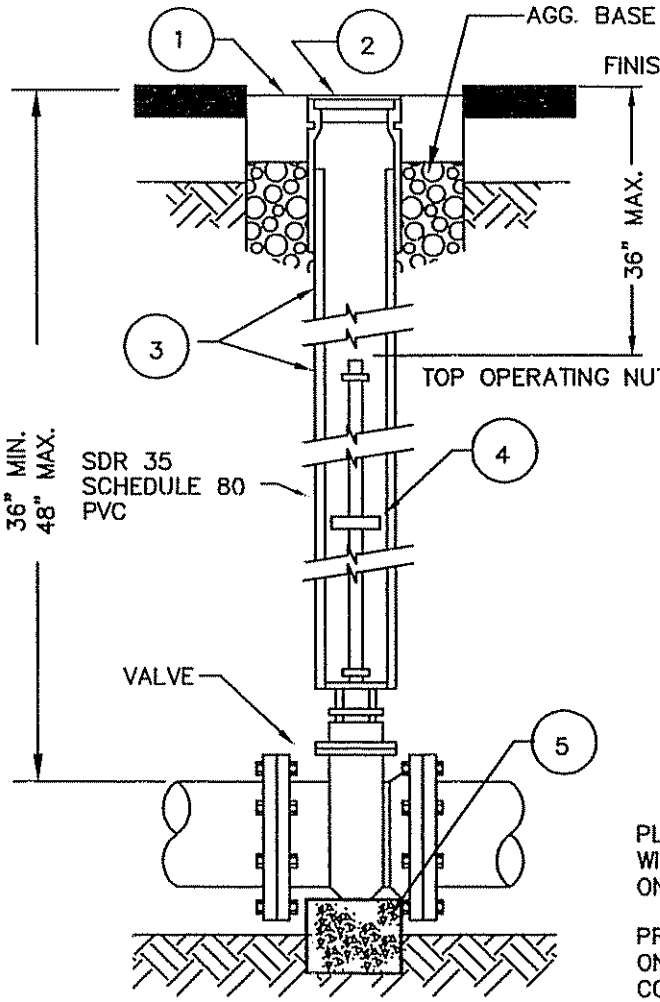

OPERATING NUT EXTENSION DETAIL

REQUIRED WHERE DISTANCE BETWEEN FINISHED GRADE AND TOP OF OPERATING NUT EXCEED 36 INCHES

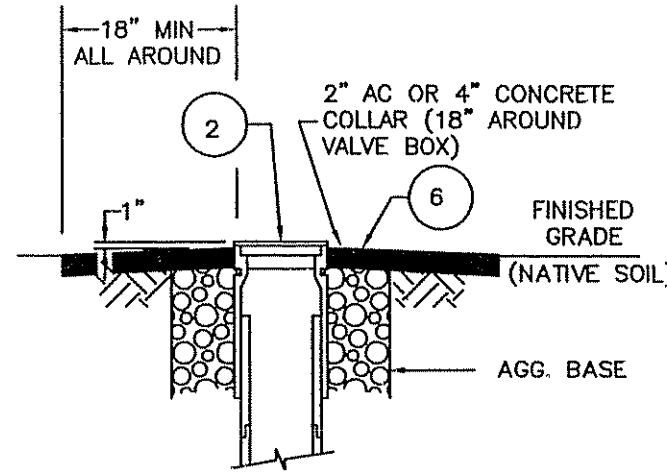

VALVE COVER PLACEMENT

NATIVE GROUND DETAIL

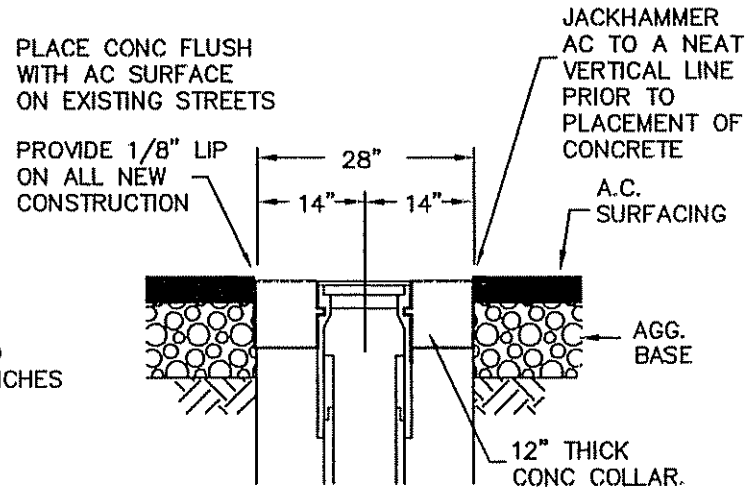

VALVE COVER ADJUSTMENT

NOTES:

1. 28" DIA. X 12" DEEP CONC. COLLAR
2. VALVE BOX
3. VALVE BOX EXTENSION
4. OPERATING NUT EXTENSION W/ 6" DIA. PLATE WASHER WELDED TO EXTENSION AT MID POINT OF ROD.(MIN. LENGTH OF ROD SHALL BE 24 INCHES)
5. PROVIDE CONC. SUPPORT UNDER 8" & LARGER VALVES. SEE FIGURE W-5.
6. PLACE 2" AC. OR 4" THICK CONC. COLLAR 18" AROUND VALVE BOX.
7. NO OPERATING NUT EXTENSION REQUIRED WHERE DISTANCE BETWEEN FINISHED GRADE AND TOP OF VALVE OPERATION NUT IS LESS THAN 36 INCHES.

SCALE: NTS	DATE: JUNE 1996	• SHASTA COUNTY SERVICE AREAS •	
		APPROVED BY:	WATER VALVE DETAILS
			PAVED AND UNPAVED SURFACES
MARK / DATE / REVISION		WILLIAM E. LYMAN	

FIGURE
W-8

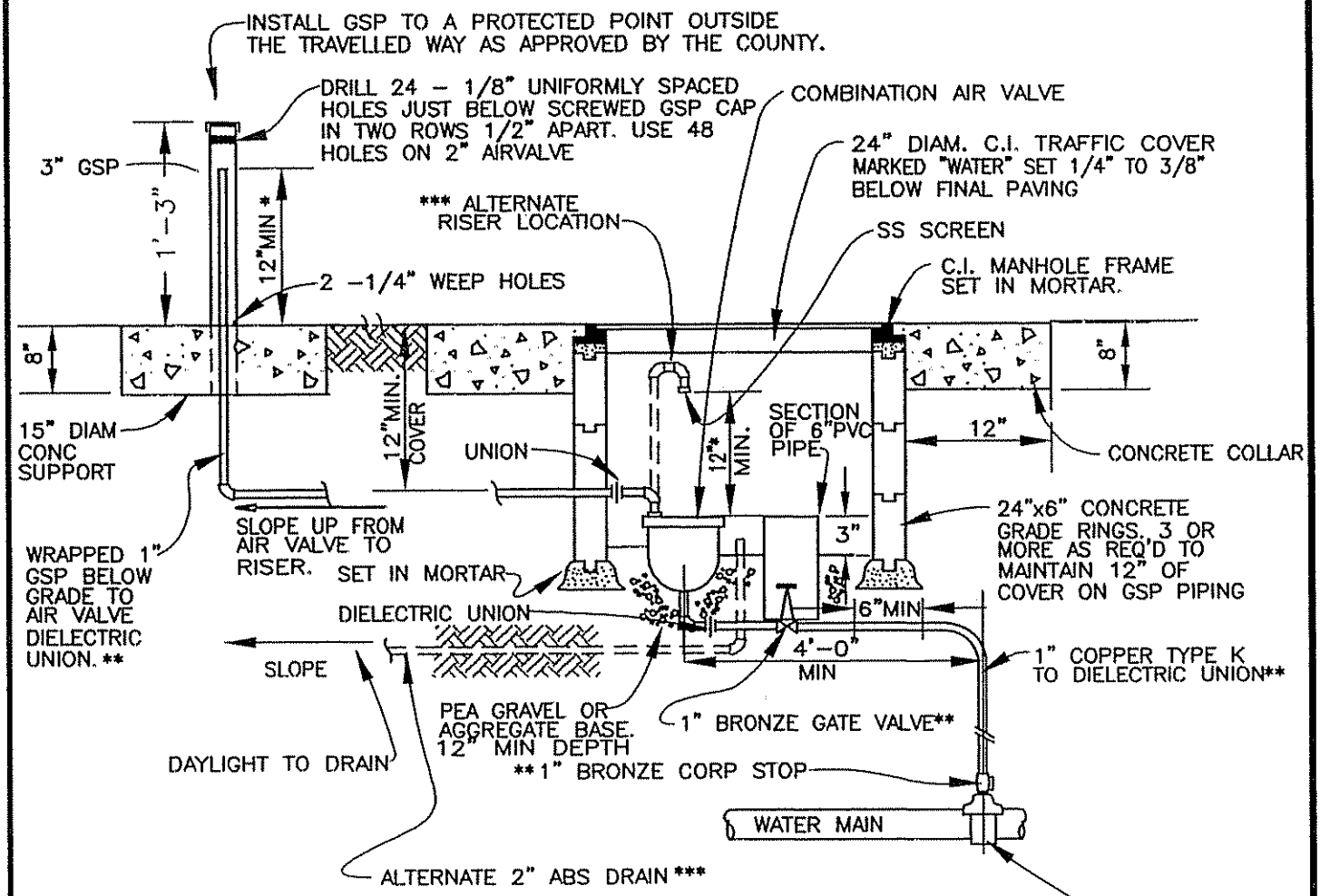

*** NOTE: AN ALTERNATE TO THE GSP PIPING AND RISER ABOVE GRADE, WHERE APPROVED BY THE ENGINEER, IS TO PLACE THE GSP RISER WITHIN THE MANHOLE AND INSTALL A 2" ABS DRAIN TO APPROVED LOCATION AS SHOWN IN DASHED LINES ABOVE.

** NOTE: PIPE SIZE SHOWN IS FOR 1" AIR VALVE USE 2" FOR 2" AIR VALVE.

**1" BRONZE SERVICE SADDLE AT HIGH SPOT IN WATER MAIN. USE DUCTILE IRON SADDLE WITH NYLON BUSHING ON DUCTILE PIPE

* NOTE: ALSO 12" MIN ABOVE MAX RECORDED FLOOD LEVEL.

SCALE: NTS	DATE: AUG 1996	• SHASTA COUNTY SERVICE AREAS •	
		APPROVED BY: William E. Lyman	ROADWAY AIR VALVE ASSEMBLY
MARK / DATE / REVISION		WILLIAM E. LYMAN	

FIGURE
W-9

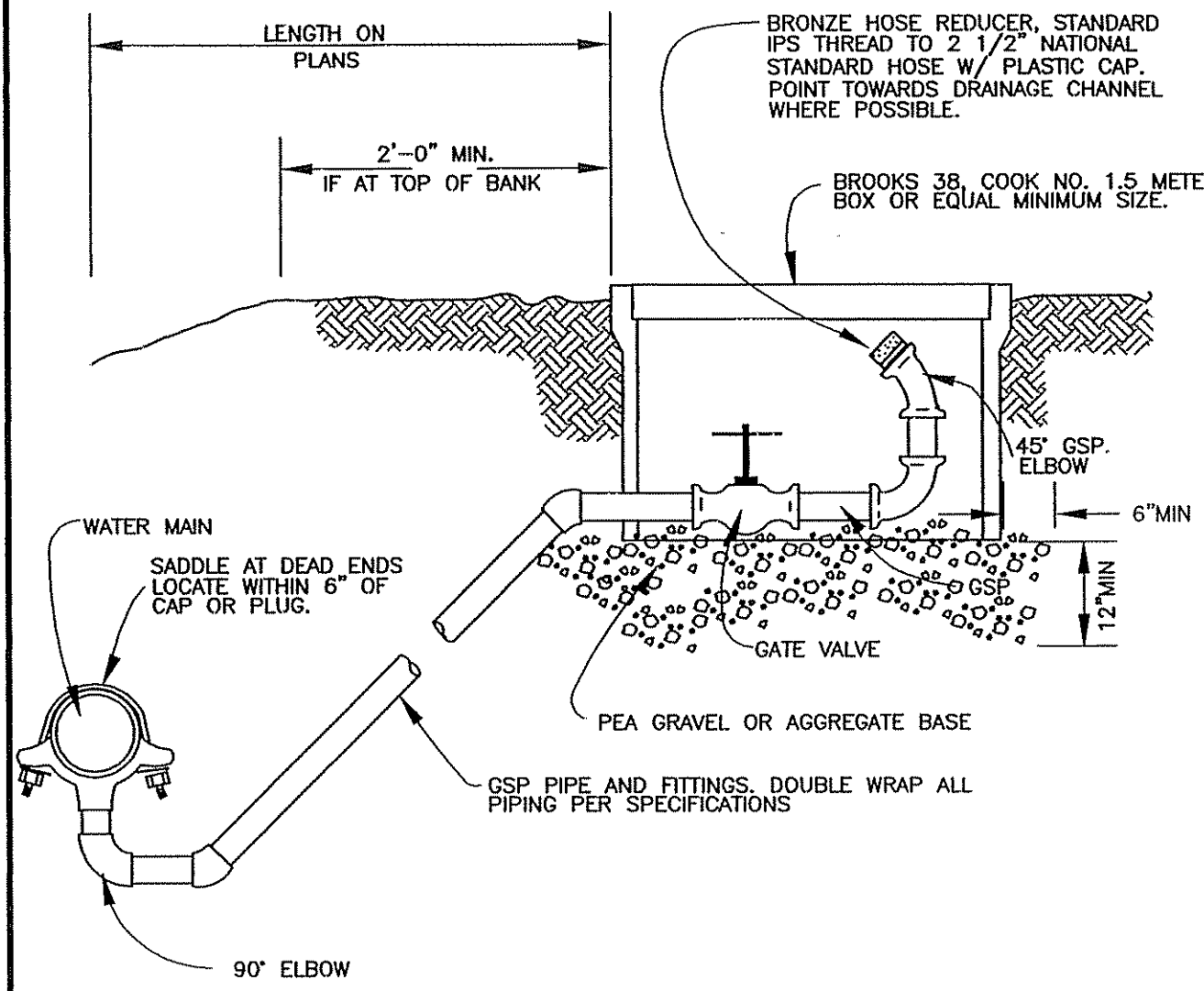

NOTE: BLOWOFF PIPING SIZE TO BE 1/4 OF PIPE DIAMETER, BUT NO SMALLER THAN 2". PIPING DIAMETER & LENGTH FOR BLOWOFF SHALL BE AS SHOWN ON PLANS. EXAMPLE: 2",15'

SCALE: NTS	DATE: JUNE 1996	• SHASTA COUNTY SERVICE AREAS •	
		APPROVED BY: William E. Lyman	BLOWOFF INSTALLATION
MARK / DATE / REVISION		WILLIAM E. LYMAN	

MARK | DATE | REVISION

SCALE: NTS

DATE: JUNE 1996

APPROVED BY:

WILLIAM E. LYMAN

• SHASTA COUNTY SERVICE AREAS •

BACKFLOW DEVICE ENCLOSURE (3/4" THROUGH 2")

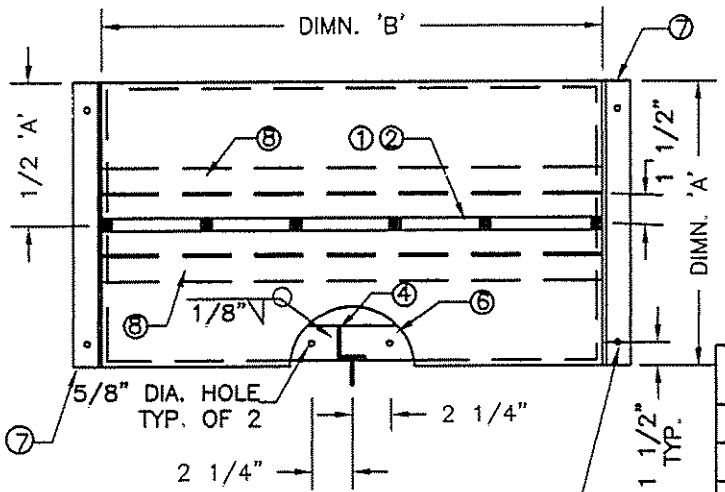

TOP VIEW

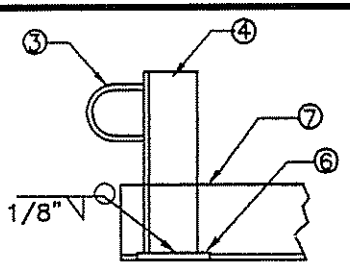

DETAIL 'A'

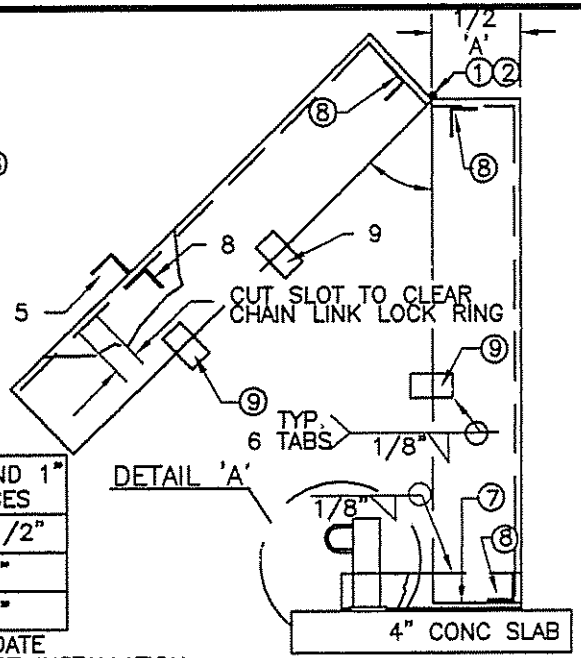

SIDE VIEW

DIMN.	1 1/2" AND 2" DEVICES	3/4" AND 1" DEVICES
A	20 1/2"	12 1/2"
B	32"	25"
C	25"	25"

* DIMN. MAY VARY TO ACCOMMODATE NONTYPICAL FIRE SERVICE DIVICE INSTALLATION

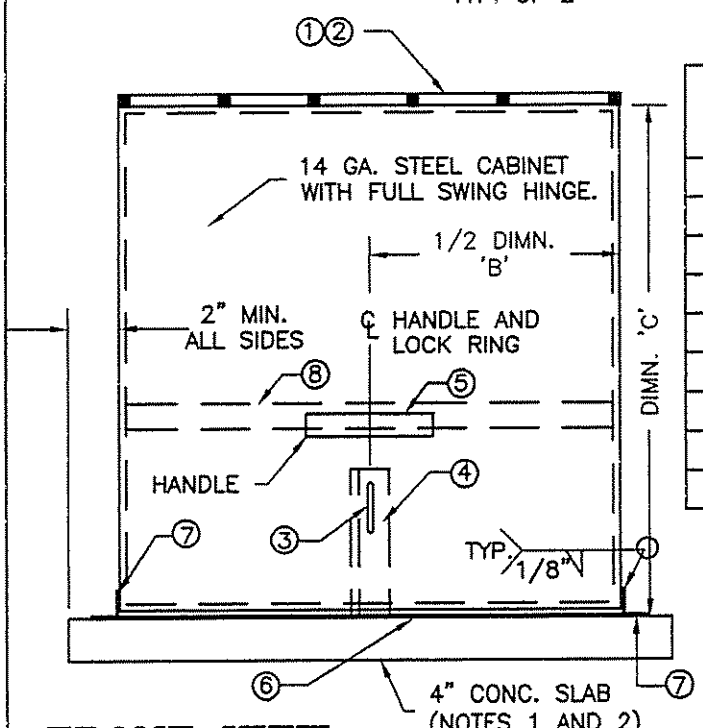

FRONT VIEW

MATERIALS LIST FOR BACK FLOW DEVICE ENCLOSURE

ITEM NO.	DESCRIPTION	LENGTH FOR 1 1/2" AND 2" DEVICES	LENGTH FOR 3/4" AND 1" DEVICES	QTY.
1	5/16" COLD ROLL HINGE PIN	32"	25"	1
2	1/4" PIPE HINGE	32"	25"	1
3	1/4" X 1 1/2" X 1 1/2" CHAIN LINK	N/A	N/A	1
4	1/4" X 1 1/2" X 1 1/2" ANGLE	5"	5"	1
5	1/8" X 1" X 1" ANGLE HANDLE	4"	4"	1
6	1/4" X 2" FLAT BAR	32 1/4"	25 1/4"	1
7	1/8" X 1 1/2" X 1 1/2" ANGLE	20 1/2"	12 1/2"	2
8	1/8" X 1 1/4" X 1 1/4" ANGLE BRACE	32"	25"	4
9	1/8" X 1" ALIGNMENT TABS	2"	2"	6

NOTES:

1. CABINET SHALL BE MOUNTED ON A 4" THICK CONC. SLAB WITH 3/8" x 4" "J" BOLTS (TYP. OF 6). SLAB TO EXTEND MIN. OF 2" BEYOND CABINET.
2. ALL PIPING PASSING THROUGH SLAB SHALL PASS THROUGH A PVC SLEEVE FOR THE FULL THICKNESS OF THE SLAB. THE SLEEVE SHALL HAVE A DIAMETER 1/2" LARGER THAN THAT OF THE PIPE.
3. CABINET SHALL BE PAINTED WITH OLIVE GREEN POWDER COAT PAINT.

FIGURE W-10

FIGURE W-11

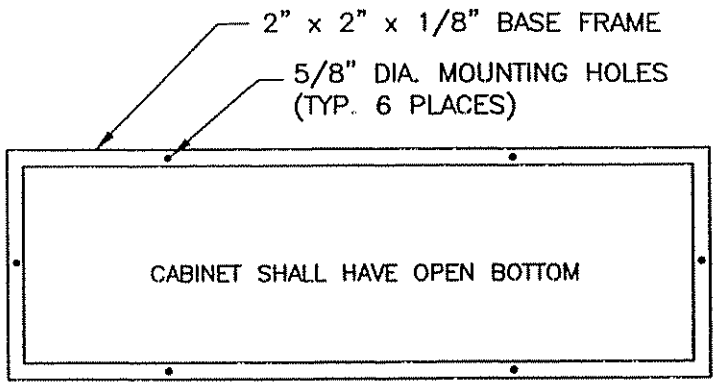

BOTTOM MOUNTING FRAME

CABINET DIMENSIONS			
UNIT SIZE	L	W	H
3" & 4"	78"	24"	48"
6"	96"	24"	60"
8"	108"	30"	60"

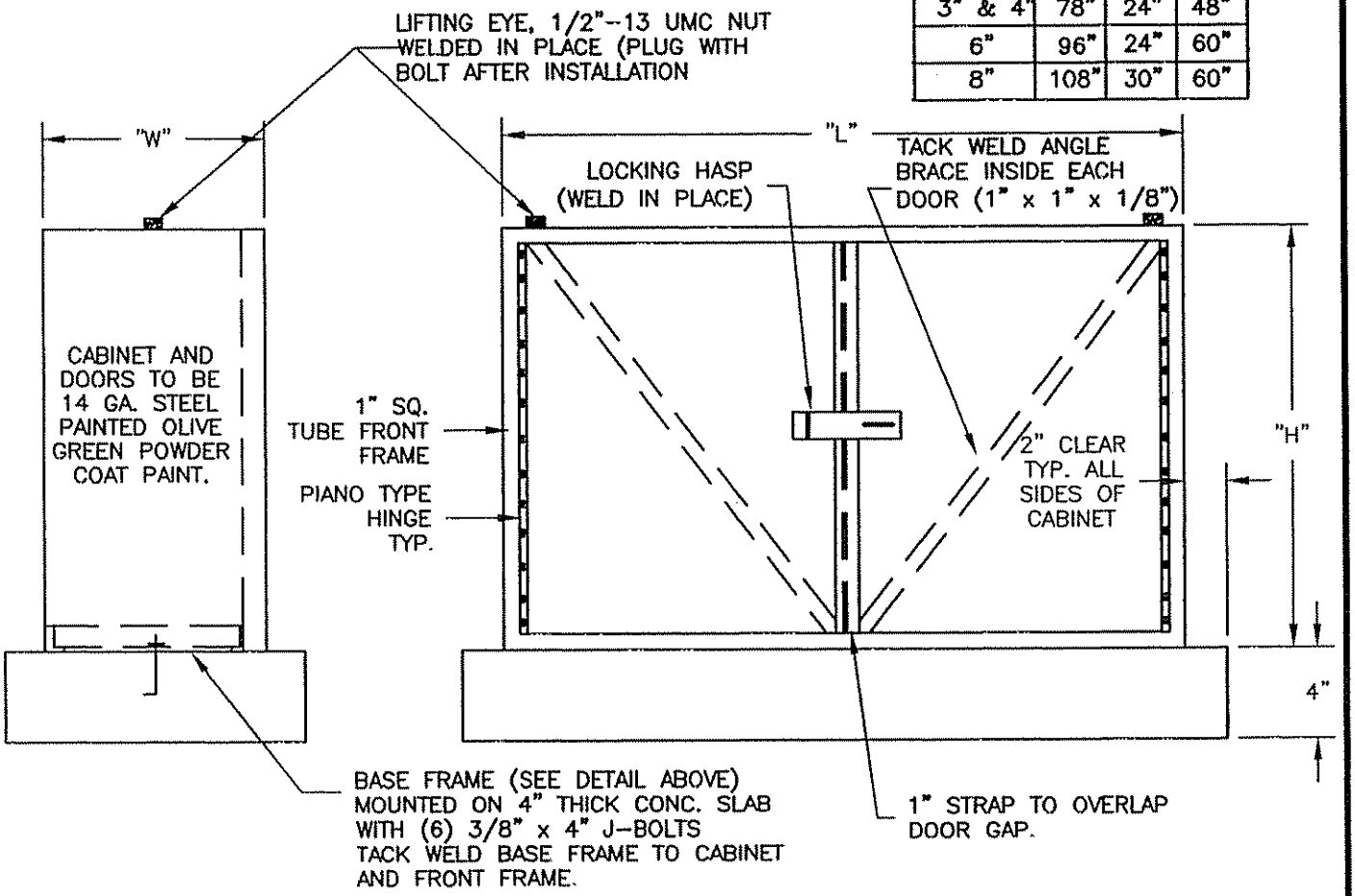

SCALE: NTS	DATE: JUNE 1996	• SHASTA COUNTY SERVICE AREAS •	
		APPROVED BY: William E. Lyman	BACKFLOW DEVICE ENCLOSURE (3" THROUGH 8")
MARK	DATE / REVISION	WILLIAM E. LYMAN	

FIGURE W-12

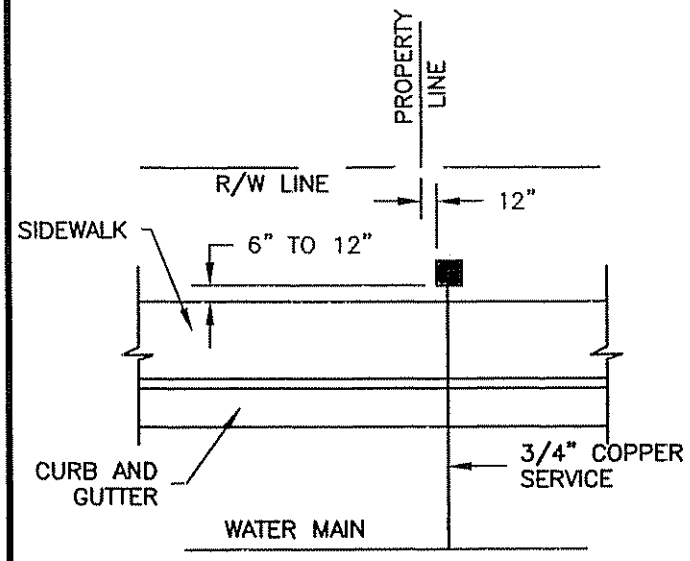

LOCATION

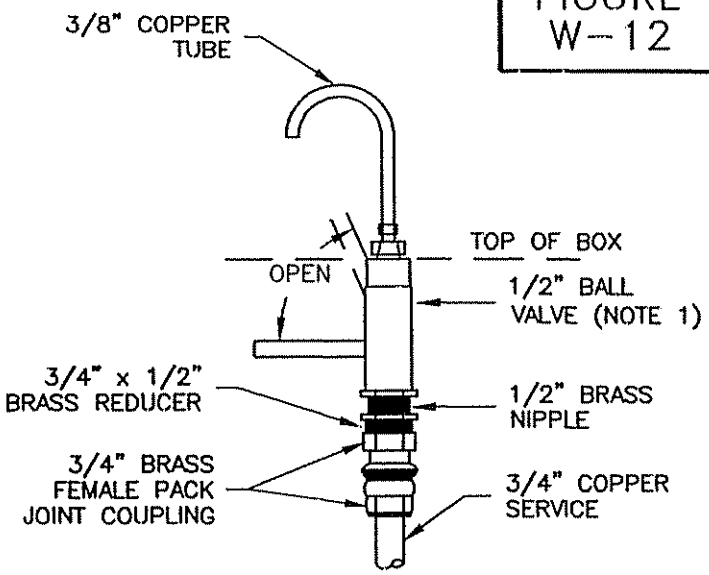

DETAIL A-A

NOTES:

1. BALL VALVE SHALL BE 1/2" APOLLO 600 W.O.G. (70-102-01), OR EQUAL, WITH HANDLE. TOP OF VALVE SHALL BE INSTALLED FLUSH WITH TOP OF BOX. HANDLE SHALL OPEN UP.
2. ALL PIPE FITTINGS TO BE BRASS.
3. FOR BACTERIOLOGICAL STATION ENCLOSURE AND CONCRETE PAD SEE FIGURE W-14.
4. ALL ABOVE GRADE PIPING SHALL BE WRAPPED WTIH ADEQUATE INSULATION TO PREVENT FREEZING. METHOD TO HAVE PRIOR APPROVAL OF THE COUNTY.

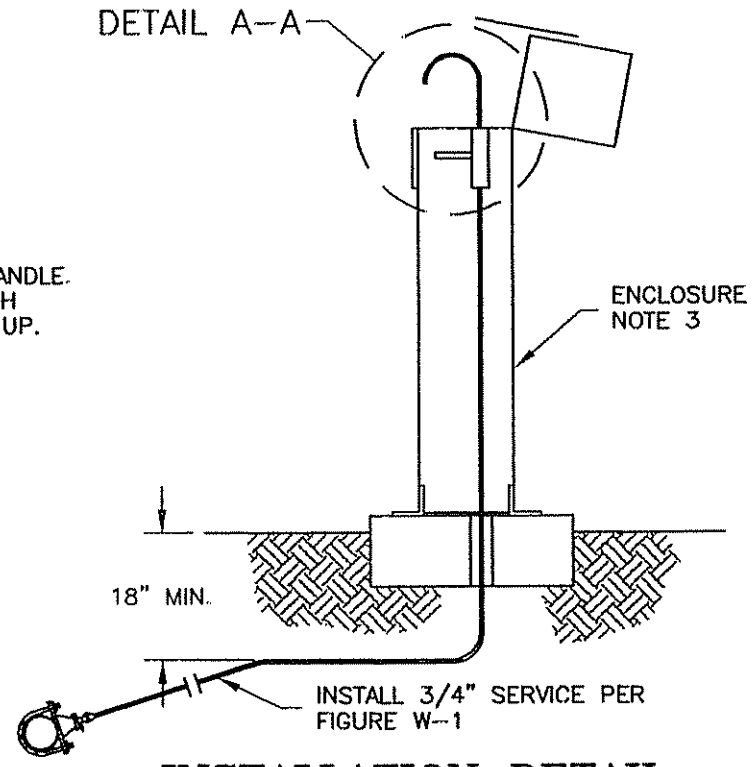

INSTALLATION DETAIL

NOTICE:

FIXED BACTERIOLOGICAL SAMPLING STATIONS ARE REQUIRED BY "CALIFORNIA WATERWORKS STANDARDS, TITLE 22." THE ESTABLISHMENT OF REPRESENTATIVE SAMPLE POINTS IS ESSENTIAL TO ASSURE THAT THE SAMPLING RESULTS FOUND ARE GIVING A TRUE INDICATION OF THE BACTERIOLOGICAL QUALITY OF THE WATER SUPPLIED THROUGHOUT THE DISTRIBUTION SYSTEM. BACTERIOLOGICAL SAMPLE STATIONS ARE REQUIRED AND SHALL BE INSTALLED IN NEW SUBDIVISIONS AT LOCATIONS AS DETERMINED BY THE COUNTY.

SCALE: NTS	DATE: JUNE 1996	• SHASTA COUNTY SERVICE AREAS •	
		APPROVED BY: William E. Lyman	BACTERIOLOGICAL SAMPLE STATION INSTALLATION
MARK / DATE / REVISION		WILLIAM E. LYMAN	

FIGURE W-13

NOTES:

1. ALL EXPOSED STEEL SURFACES SHALL BE OLIVE GREEN POWDER COAT PAINT.
2. CONCRETE TO BE CLASS 500-C-2500
3. ALL BOLTS AND NUTS TO BE GALVANIZED.

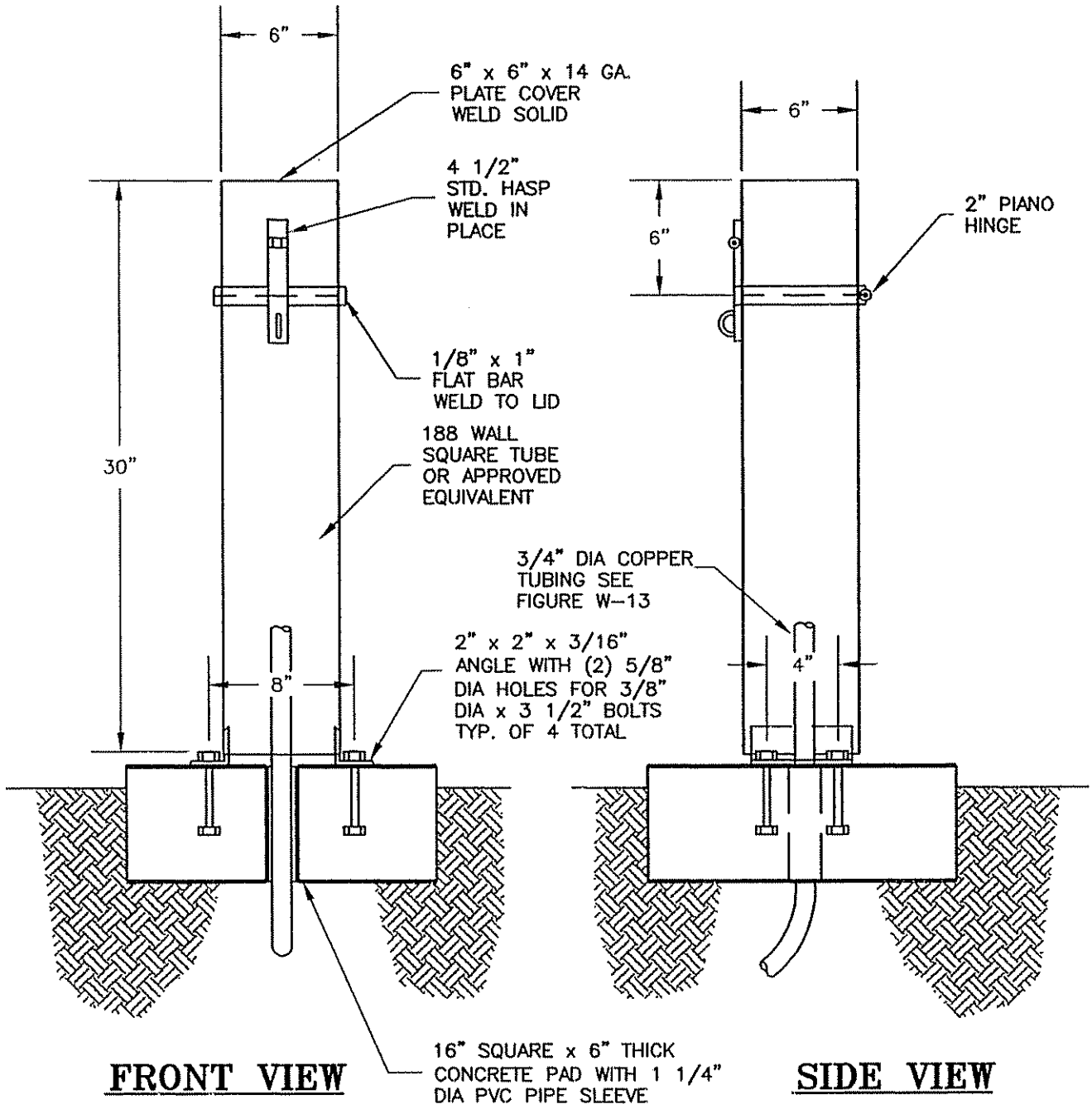

SCALE: NTS	DATE: JUNE 1996	• SHASTA COUNTY SERVICE AREAS •	
		APPROVED BY:	BACTERIOLOGICAL SAMPLE STATION ENCLOSURE
MARK / DATE / REVISION		WILLIAM E. LYMAN	

FIGURE W-14

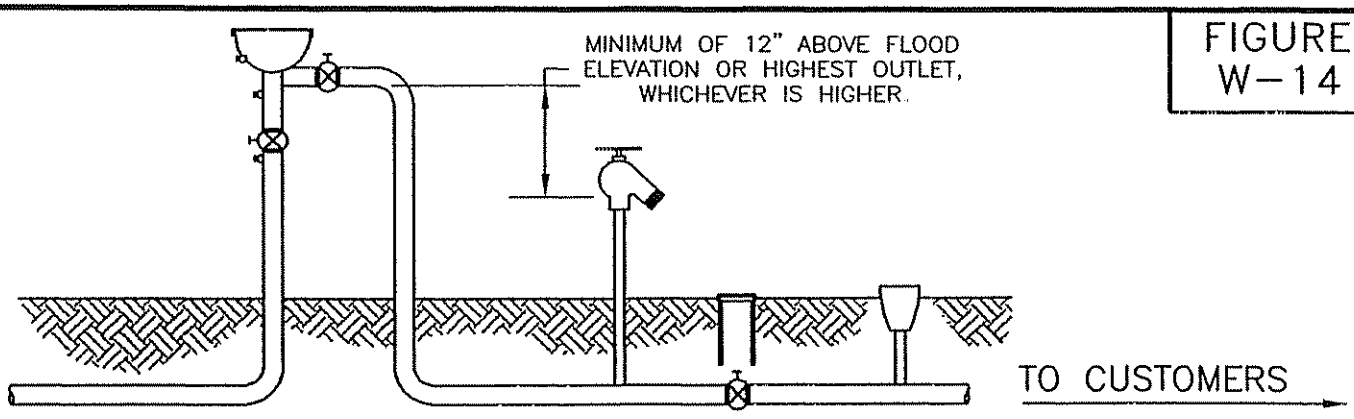

DOWNSTREAM SIDE OF PRESSURE VACUUM BREAKER SHALL BE MAINTAINED UNDER PRESSURE BY A VALVE. THERE SHALL BE NO MEANS OF IMPOSING PRESSURE BY PUMP OR OTHER MEANS.

NOTE:
ONLY ASSEMBLIES TESTED AND CERTIFIED BY AN ACCEPTABLE LABORATORY AND APPROVED FOR USE BY THE CALIFORNIA DEPARTMENT OF HEALTH SERVICES SHALL BE INSTALLED.

PRESSURE VACUUM BREAKER

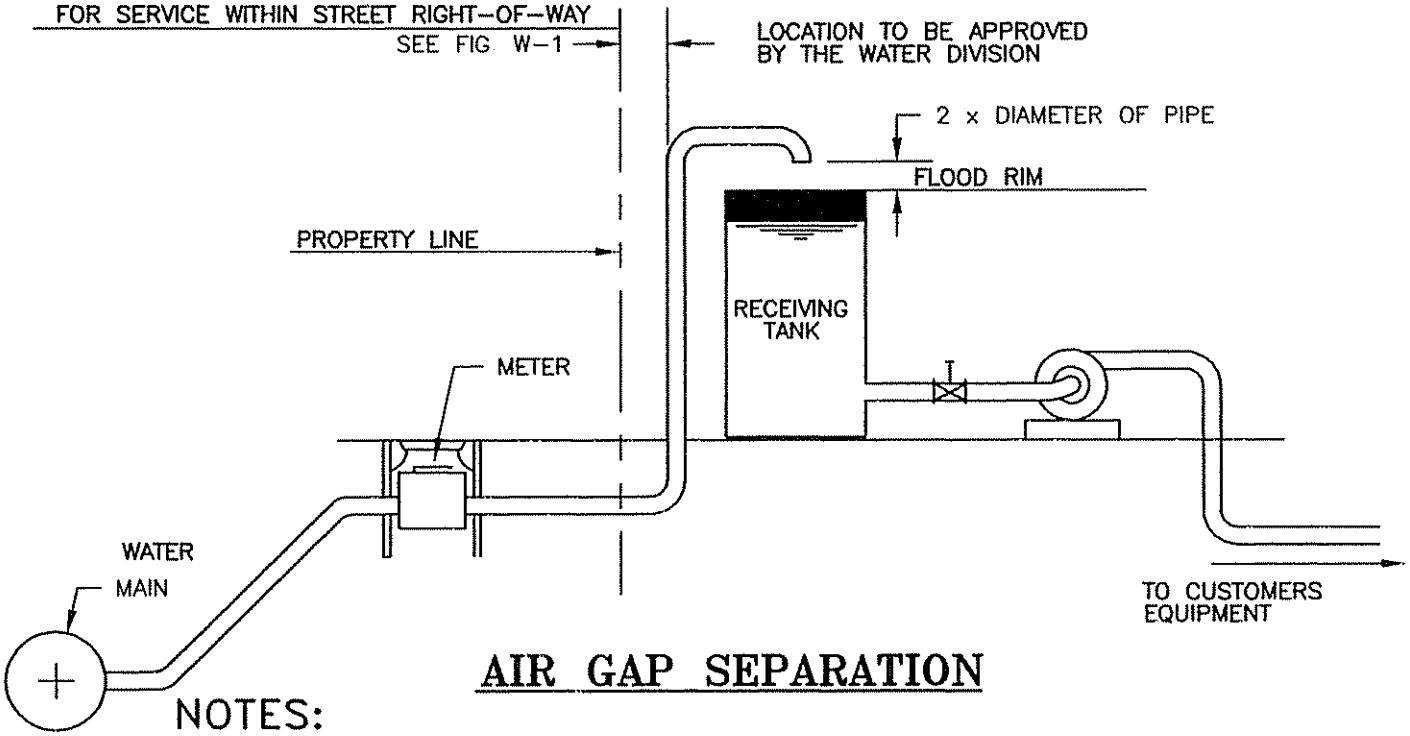

AIR GAP SEPARATION

NOTES:

1. RECEIVING TANK SHALL BE LOCATED AS CLOSE TO PROPERTY AS PRACTICAL.
2. NO CONNECTIONS OR TEES SHALL BE ALLOWED IN SERVICE LINE BETWEEN METER AND RECEIVING TANK.
3. FOR INSTALLATION OF WATER SERVICE AND METER SEE FIGURE W-1

NOTE
BACKFLOW CONTROL DEVICES ARE REQUIRED UNDER STATE OF CALIFORNIA ADMINISTRATIVE CODE, TITLE 17, AND SHALL BE INSTALLED IN ACCORDANCE THEREOF.

SCALE: NTS	DATE: MAY 1996	SHASTA COUNTY SERVICE AREAS	
		APPROVED BY: William E. Lyman	AIR GAP SEPARATION
MARK	DATE	REVISION	WILLIAM E. LYMAN

FIGURE W-15

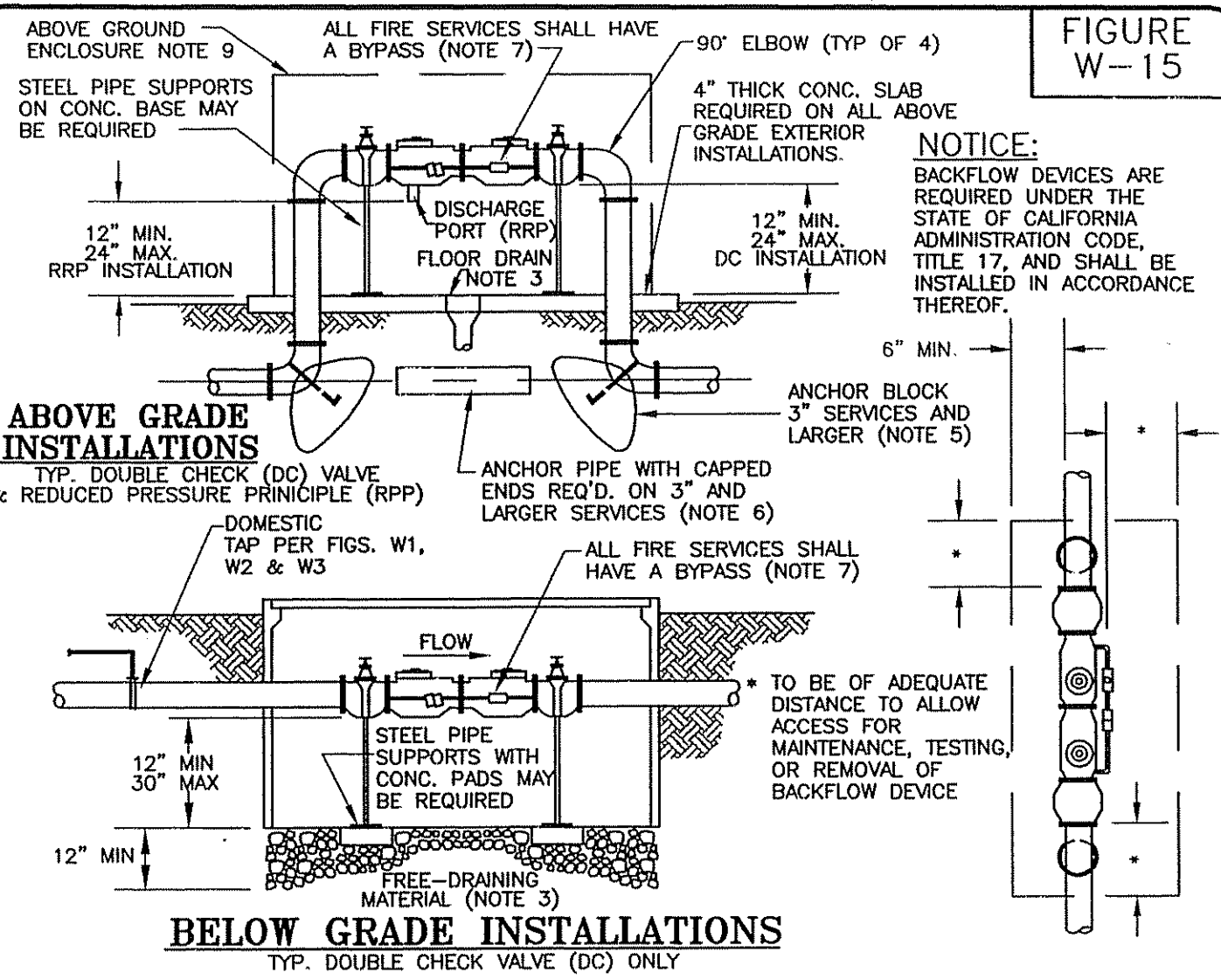

NOTICE:

BACKFLOW DEVICES ARE REQUIRED UNDER THE STATE OF CALIFORNIA ADMINISTRATION CODE, TITLE 17, AND SHALL BE INSTALLED IN ACCORDANCE THEREOF.

NOTE:

1. ALL CONSTRUCTION AND ALL MATERIALS USED SHALL BE IN ACCORDANCE WITH THE SHASTA COUNTY DEVELOPMENT STANDARDS AND THE SPECIFICATION FOR PUBLIC WORKS CONSTRUCTION. (GREEN BOOK - LATEST EDITION)
2. ALL ABOVE GROUND PIPING INSTALLATIONS, 3/4" THROUGH 2", SHALL BE COPPER OR BRASS AND ALL 3" AND LARGER SHALL BE DUCTILE IRON PIPE WITH FLANGED FITTINGS.
3. WHEN VALVES ARE INSTALLED WITHIN THE CONFINES OF A BUILDING (SPECIAL CASE), ENCLOSURE OR VAULT, ADEQUATE DRAINAGE SHALL BE PROVIDED.
4. A REDUCED PRESSURE PRINICIPLE DEVICE (RPP) MAY BE REQUIRED DEPENDING ON THE APPLICATION. RRP TO BE INSTALLED ABOVE GRADE ONLY.
5. ALL THRUST BLOCKS OR ANCHORS TO BE DESIGNED ON AN INDIVIDUAL BASIS. (SEE FIG. W--5)
6. APPLICANT SHALL HAVE THE OPTION OF DESIGNING AND CONSTRUCTING CONCRETE ANCHORS AS SHOWN OR PLACING A CONTINUOUS CONCRETE BLOCK BETWEEN ELBOWS. IF SOIL IS UNDISTURBED. CONTRACTOR MAY OMIT BRACE WITH PRIOR COUNTY APPROVAL.
7. BYPASS LINES ARE REQUIRED ON ALL FIRE SERVICES WHERE DOUBLE CHECK OF RPP VALVE IS INSTALLED. BYPASS SHALL HAVE A DETECTOR METER AND DOUBLE CHECK OR RRP VALVE. DOMESTIC TAPS ARE PERMITTED ON THE STREET SIDE OF THE BACKFLOW DEVICE ONLY. BACK FLOW DEVICE SHALL BE LOCATED WITHIN COUNTY RIGHT-OF-WAY.
8. ALL STEEL BACKFLOW DEVICES SHALL BE FUSION BONDED EPOXY COATED INTERNALLY AND EXTERNALLY.
9. ABOVE GRADE ENCLOSURE INSTALLATIONS PER FIG. W-11 & W-12.
10. VALVES LARGER THAN 8" SHALL HAVE INDIVIDUALLY DESIGNED VAULTS AND SHALL HAVE APPROVAL OF THE COUNTY PRIOR TO FABRICATION.
11. ALL ABOVE GRADE PIPING AND VALVES SHALL BE WRAPPED WITH ADEQUATE INSULLATION TO PREVENT FREEZING. METHOD SHALL HAVE PRIOR APPROVAL OF THE COUNTY.

SCALE: NTS	DATE: JUNE 1996	• SHASTA COUNTY SERVICE AREAS •	
		APPROVED BY: William E. Lyman	DOUBLE CHECK VALVE AND REDUCED PRESSURE PRINICIPLE DEVICES
MARK	DATE	REVISION	WILLIAM E. LYMAN

MARK	DATE	REVISION

APPROVED BY:
WILLIAM E. LYMAN

SCALE: NTS
DATE: JUNE 1996

• SHASTA COUNTY SERVICE AREAS •

REDUCED PRESSURE PRINCIPLE DEVICES (3/4" - 2")

MATERIAL LIST

1. CUSTOMER SERVICE GATE VALVE.
2. 90° STD. ELBOW BRASS (S-40)
3. COUPLING MIP x COMP W/STAINLESS SET SCREW.
4. STEEL ENCLOSURE (SEE SPECIFICATIONS W-18 AND W-19).
5. REINFORCING BRACE PVC/GALVANIZED STEEL.
6. APPROVED BALL VALVES
7. RED BRASS PIPE S-40
8. ENCLOSURES SHALL BE DEFCO BF1 OR BF2 OR APPROVED EQUAL.
9. ACCEPTABLE BACKFLOW DEVICES ARE AMES, FEBCO, WILKINS OR APPROVED EQUAL.

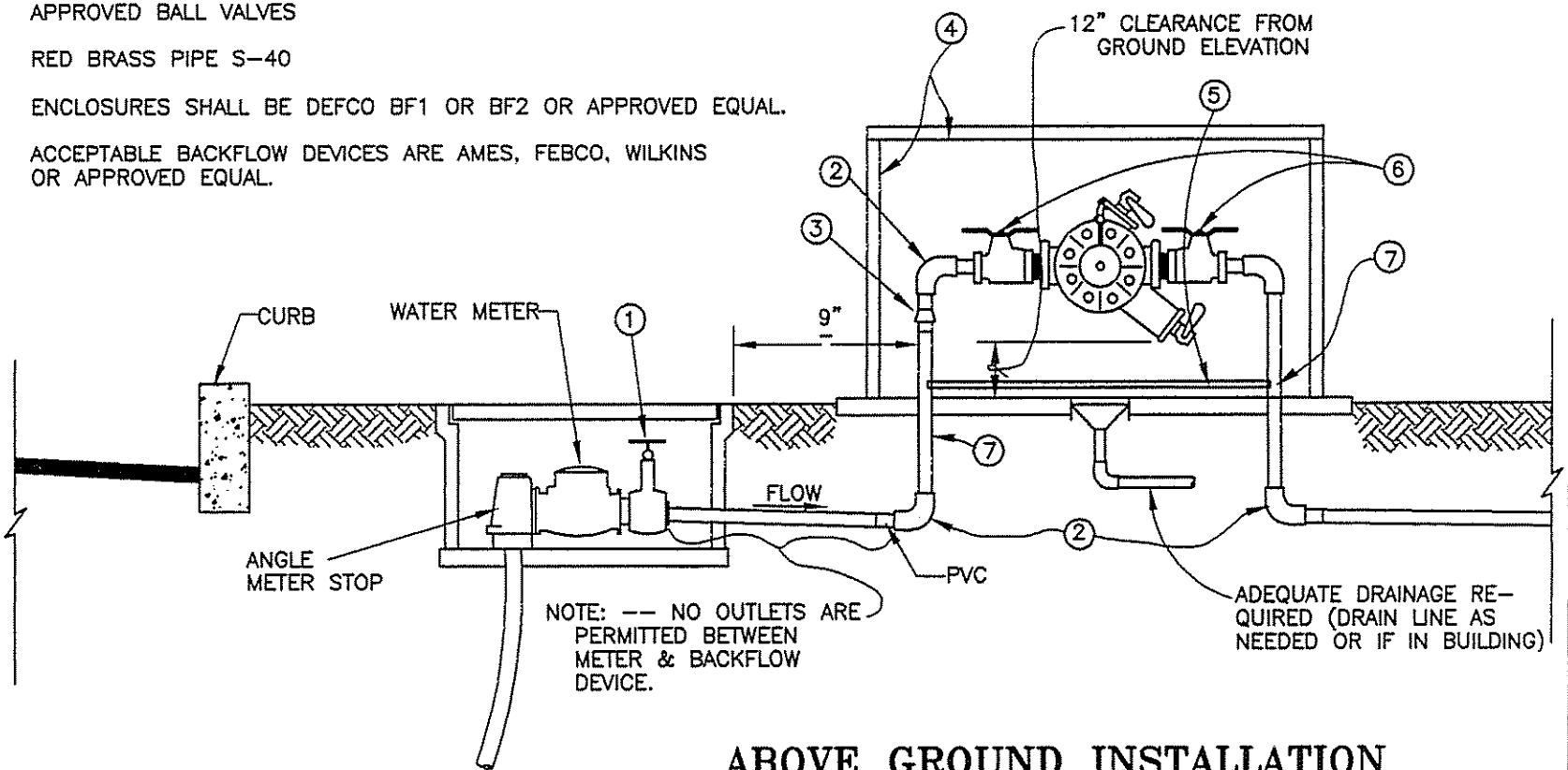

ABOVE GROUND INSTALLATION

NTS

FIGURE W-16

FIGURE
W-17

14 GA. STEEL ENCLOSURE W/WELDED SEAMS. PRIMER OVERALL W/DARK GREEN OIL BASED ENAMEL PAINT OR POWDER COAT ON EXTERIOR. OPTIONAL MATERIAL CEDAR/REDWOOD OR FIBERGLASS CAN BE USED FOR FABRICATION.

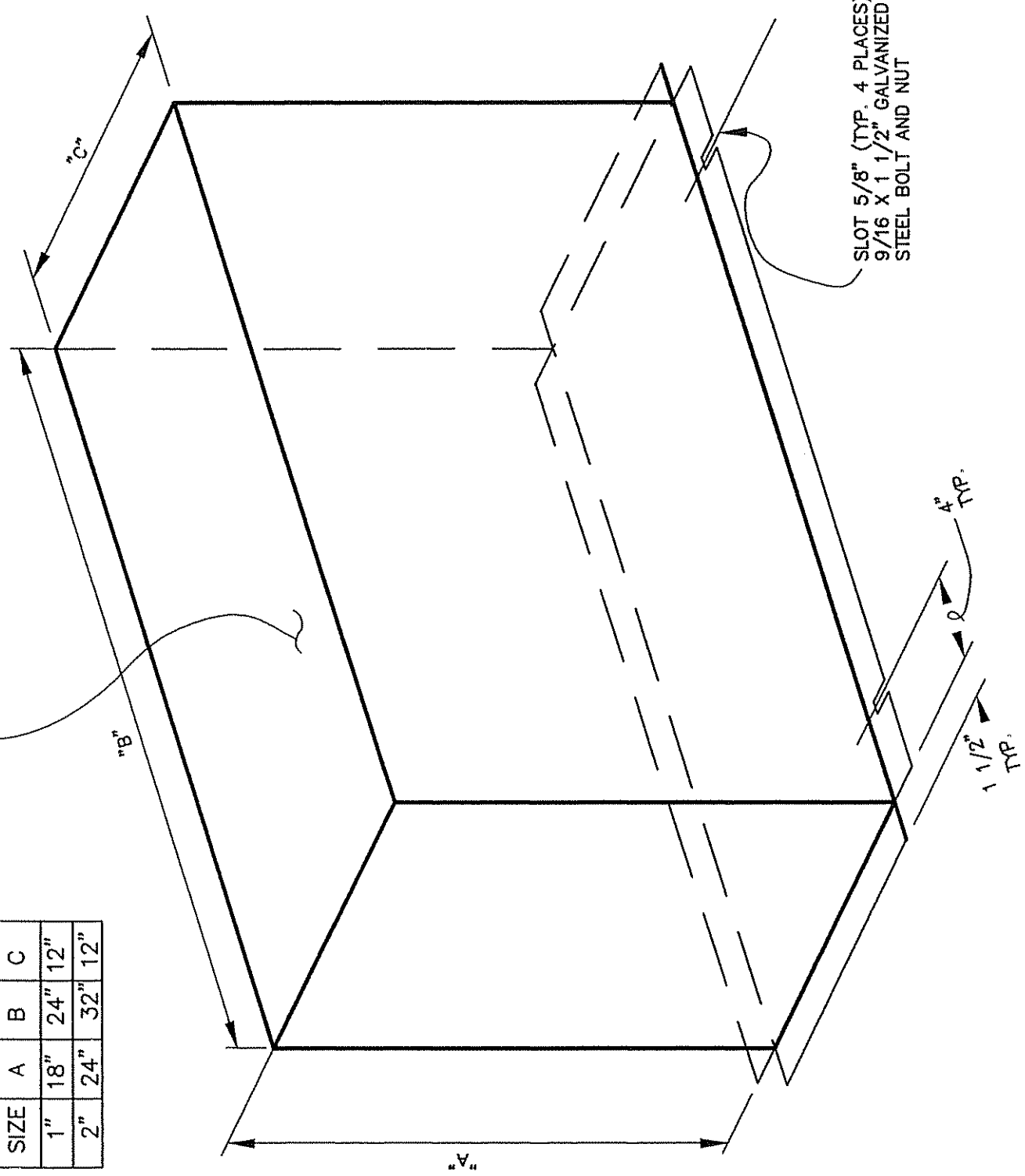

SIZE	A	B	C
1"	18"	24"	12"
2"	24"	32"	12"

SCALE: NTS	DATE: JUNE 1996	• SHASTA COUNTY SERVICE AREAS •	
		APPROVED BY: William E. Lyman	STEEL ENCLOSURE FOR 3/4" -2" REDUCED PRESSURE PRINCIPLE DEVICE
MARK / DATE / REVISION		WILLIAM E. LYMAN	

FIGURE
W-18

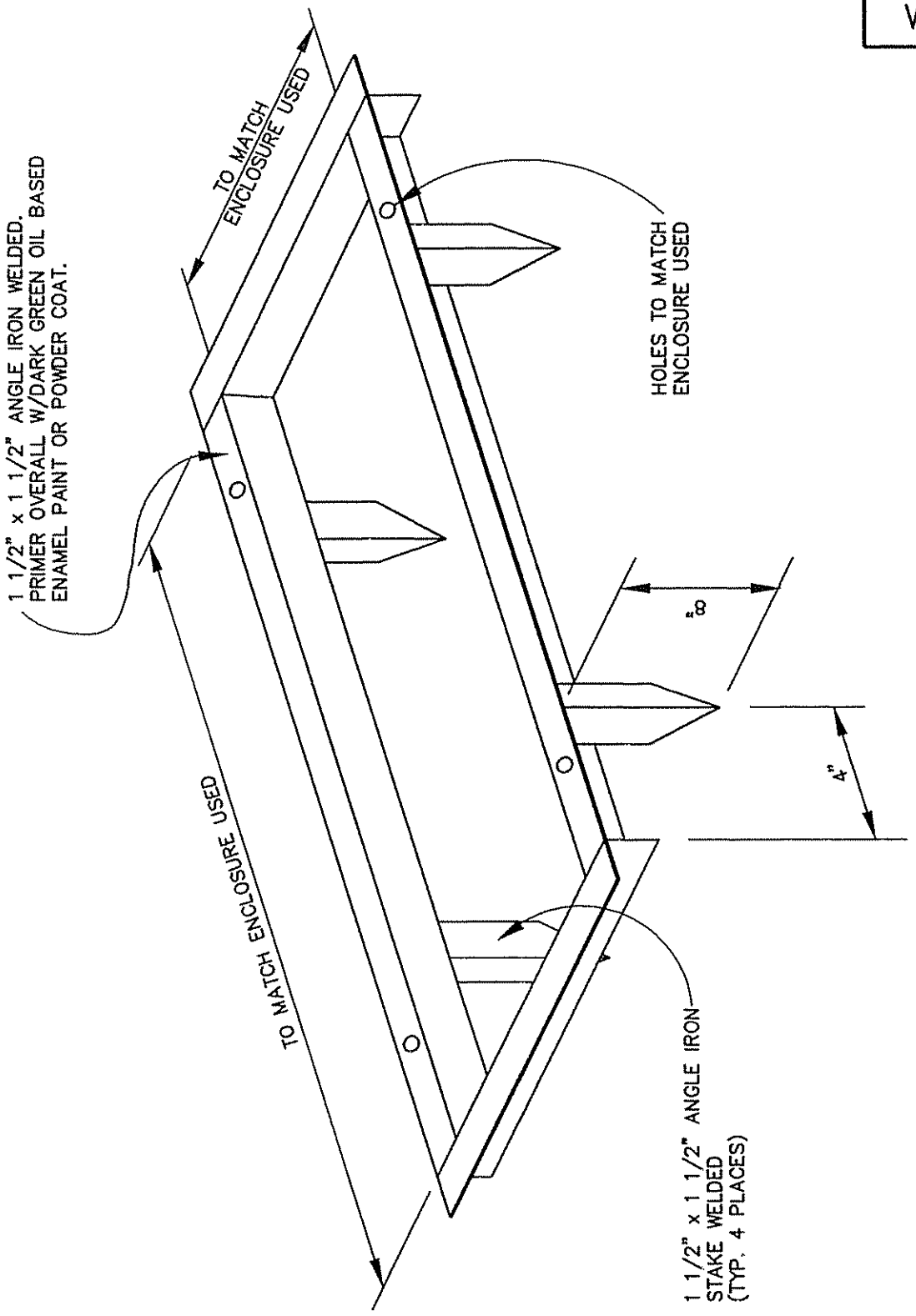

SCALE: NTS	DATE: JUNE 1996	• SHASTA COUNTY SERVICE AREAS •	
		APPROVED BY:	ENCLOSURE SUBFRAME FOR 3/4" – 2" REDUCED PRESSURE PRINICIPLE DEVICE
MARK / DATE / REVISION		WILLIAM E. LYMAN	

NOTES:

FIGURE W-19

1. CALIFORNIA WATERWORKS STANDARDS, TITLE 22, FOR AIR AND VACUUM RELIEF VALVES STATES THE FOLLOWING:

   (A) VENT OPENINGS FOR AIR AND VACUUM RELIEF AND AIR RELEASE VALVES SHALL BE
   (1) EXTENDED AT LEAST (1) ONE FOOT (0.3m) ABOVE GRADE AND ABOVE MAXIMUM RECORDED HIGH WATER LEVEL. (CASE 1)
   (2) DOWNWARD FACING AND SCREENED.

   (B) WHERE THE REQUIREMENTS OF (A)(1) CANNOT BE PRACTICABLY MET, VENT OPENINGS MAY BE LOCATED IN A SUBSURFACE CHAMBER OR PIT (CASE 2) UNDER THE FOLLOWING CONDITIONS:
   (1) PIT IS ADEQUATELY DRAINED. (METHOD TO BE APPROVED BY THE COUNTY).
   (2) THE PIT DRAIN IS NOT CONNECTED BY PIPE OR OTHER CLOSED CONDUIT TO A SEWER OR STORM DRAIN WITHOUT AN AIR SEPARATION.
2. PIPE AND FITTINGS PER THESE CSA STANDARDS.
3. IN THE CASE OF PRESSURE (HOT) TAP, A CORPORATION STOP SHALL BE INSTALLED.
4. ALL VALVES, VALVE BOXES, COMBINATION AIR VALVES, CORPORATION STOPS, AND SADDLES SHALL BE PER THESE CSA STANDARDS.
5. THE MINIMUM ACCEPTABLE SIZE COMBINATION AIR VALVE SHALL BE 2 INCH. SIZE OF CAV SHALL BE ENGINEERED TO MANUFACTURERS SPECIFICATIONS.

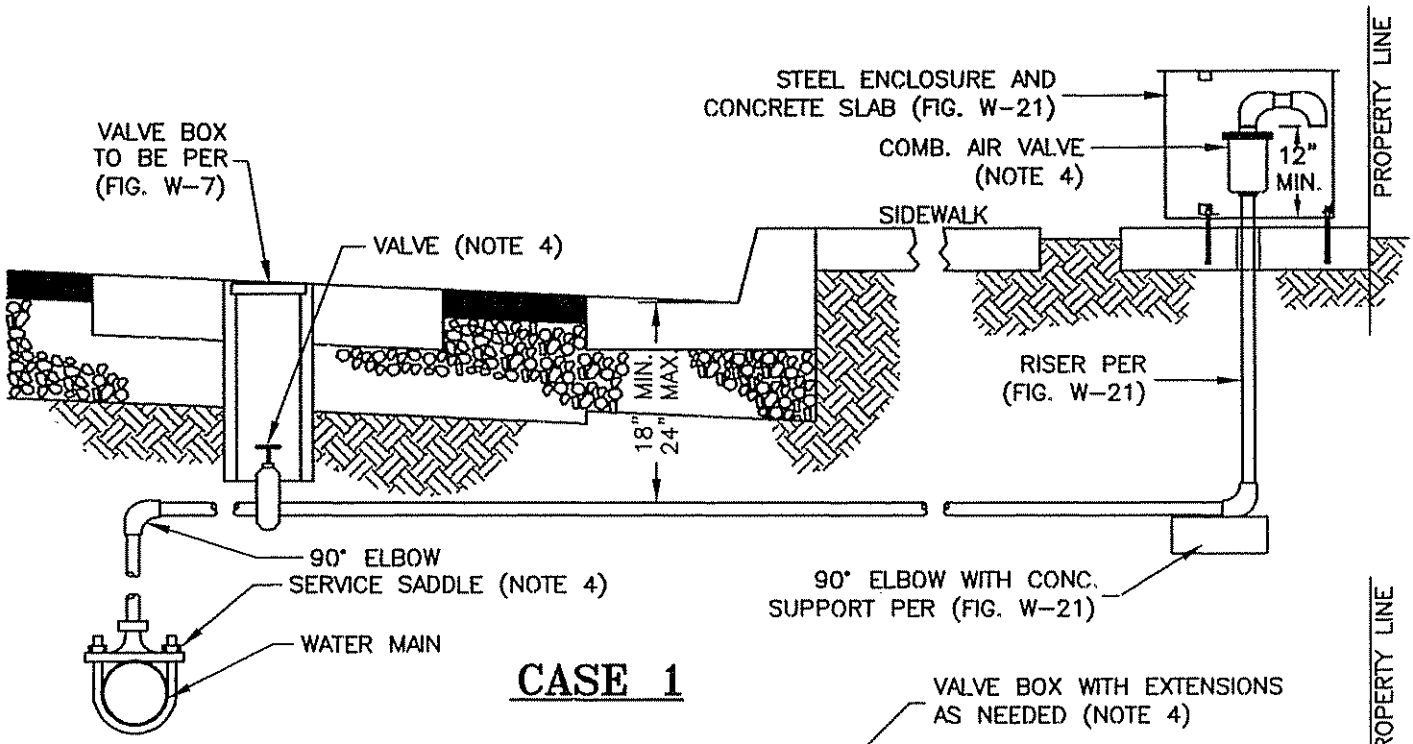

CASE 1

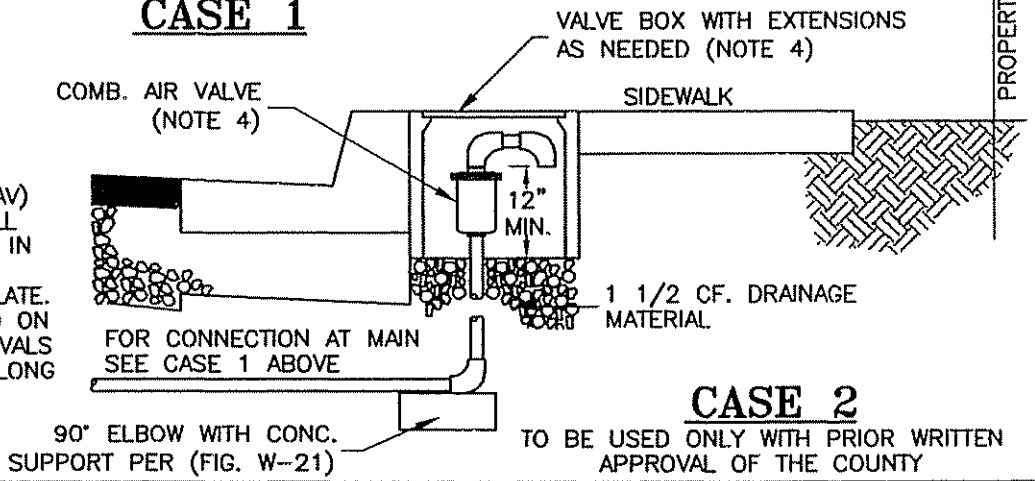

CASE 2

TO BE USED ONLY WITH PRIOR WRITTEN APPROVAL OF THE COUNTY

NOTICE:

COMBINATION AIR VALVE (CAV) SHALL BE INSTALLED ON ALL PIPELINE HIGH POINTS AND IN CHANGE IN GRADE WHERE AIR POCKETS MAY ACCUMULATE. A CAV SHALL BE INSTALLED ON HIGH POINTS AND AT INTERVALS OF 1500 TO 2000 FT ON LONG RUNS LACKING A CLEARLY DEFINED HIGH POINT.

SCALE: NTS	DATE: JUNE 1996	• SHASTA COUNTY SERVICE AREAS •	
		APPROVED BY:	COMBINATION AIR VALVE (CAV) AIR AND VACUUM – AIR RELEASE
MARK / DATE / REVISION		WILLIAM E. LYMAN	

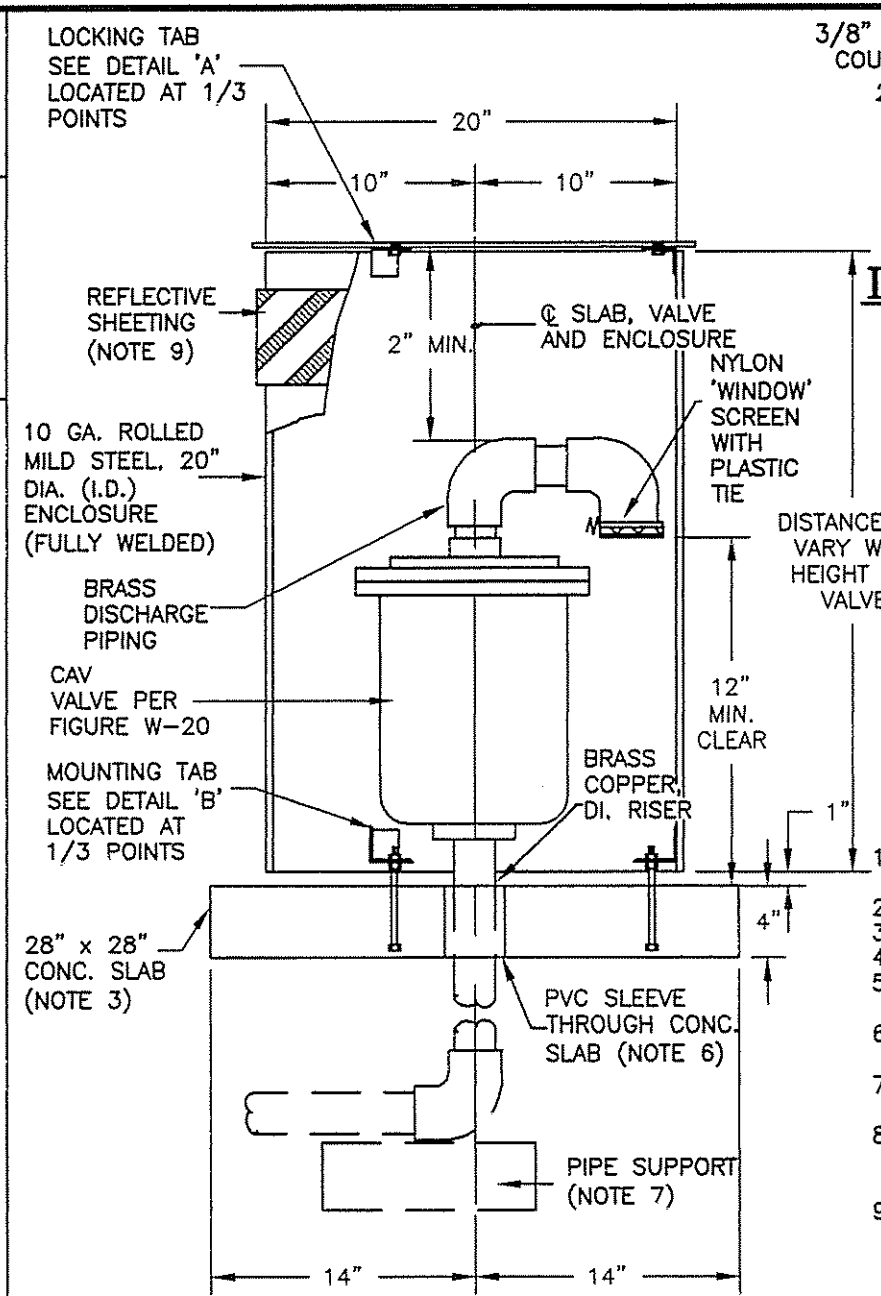

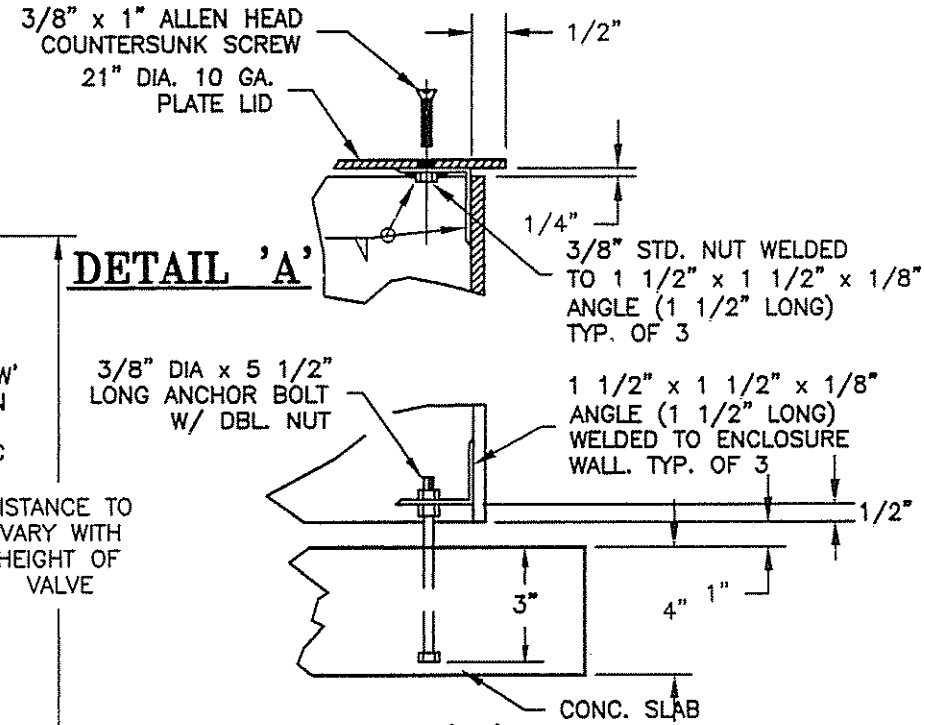

DETAIL 'A'

DETAIL 'B'

NOTES:

1. THIS STANDARD DRAWING TO BE USED IN CONJUNCTION WITH FIGURE W-20 OR AS SPECIFIED BY THE ENGINEER.
2. ALL SERVICES PER THESE CSA STANDARDS
3. CONCRETE TO BE CLASS 500-C-2500
4. ALL BOLTS, NUTS, ETC. TO BE GALVANIZED.
5. ALL METAL SURFACES, NOT GALVANIZED TO BE PAINTED WITH OLIVE GREEN POWDER COAT PAINT.
6. PLACE P.V.C. PIPE SLEEVE THROUGH SLAB. PIPE TO BE 1/2" LARGER THAN RISER.
7. PROVIDE CONCRETE SUPPORT OF ADEQUATE SIZE TO SUPPORT WEIGHT OF AIR VALVE.
8. ENCLOSURE DESIGN FOR 2", 3" & 4" VALVES. FOR 6" OR 8" VALVES, ENCLOSURE MUST BE ENLARGED TO ACCOMODATE LARGER VALVES.
9. REFLECTIVE SHEETING SHALL BE INSTALLED AT TOP OF EXTERIOR SIDEWALL. WRAP SHEETING 360° AROUND ENCLOSURE. REFLECTIVE SHEETING SHALL BE 3M SCOTCHLITE (HIGH INTENSITY) NO. 3820 4"(384L) OR APPROVED EQUAL.
10. ALL ABOVE GRADE PIPING AND CAV SHALL BE WRAPPED WITH ADEQUATE PIPE INSULATION TO PREVENT FREEZING. METHOD TO HAVE PRIOR APPROVAL OF THE COUNTY.

FIGURE W-20

SCALE: NTS | DATE: JUNE 1996

• SHASTA COUNTY SERVICE AREAS •

APPROVED BY:

WILLIAM E. LYMAN

COMBINATION AIR VALVE (CAV) ENCLOSURE DETAIL

MARK	DATE	REVISION

GENERAL PROCEDURES FOR
FORMATION OF A
COUNTY SERVICE AREA (CSA)
FOR EXISTING FACILITIES

1. Proponents submit a petition to the Board of Supervisors requesting formation of the CSA, identifying its boundaries and describing the service to be provided. (Petition must include signatures of more than 10% of the registered voters I the area to be served.)

2. The Board of Supervisors refers to the request to the Department of Public Works for processing.

3. For existing systems, proponents shall submit a report prepared by an engineering firm experienced in the design, operation and maintenance of the type of system being requested for annexation, which includes a comprehensive analysis of the system with respect to the following:

   A. An operational analysis of the facilities regarding the current and future usage demands; i.e. flows, pressure treatment facilities, and storage capacity, including improvement cost required to meet those demands, if necessary.

   B. An analysis of the current status of the facility regarding all federal, state and local standards and regulations including costs to bring the facility up to those standards, if necessary.

   C. An analysis of probable major maintenance and capital improvement costs which will be required in the next 10 years.

   D. A report of the current valuation of the infrastructure, including a discussion of all permits, rights of way, water rights, easements, debts, fees, existing contracts and other legal or regulatory requirements which exist or will be required to operate the system.

   E. A financial plan which will insure the fiscal integrity of the system for the next 10 years. Said plan to include all capital improvements, maintenance, monitoring, regulatory fees, and administration costs, etc. necessary for the County to operate the system.

4. Proponents shall submit with the report a deposit in an amount, as determined by the Department of Public Works, sufficient to cover the cost of analysis and review of the report by the County or its consultant.

5. Once determined to be feasible, an application is made to the Local Agency Formation Commission (LAFCO). The Department of Public Works staff prepares CEQA documents and LAFCO becomes the Lead Agency. Proponents of the CSA must pay all LAFCO processing fees at this time.

6. LAFCO conducts a public hearing and a decision approving, conditionally approving, or disapproving the proposal is made by LAFCO.

7. If the proposal is approved, the Department of Public Works staff prepares a resolution of intention for the formation of the CSA for submission to the Board of Supervisors. This resolution will set the date for a public hearing at which time the Board of Supervisors will consider the formation of the CSA.

8. At the public hearing the Board of Supervisors may adopt a resolution ordering formation of the CSA, unless protests are received by more than 50% of the registered voters or owners of property valued at more than 50% of the value of all the property in the proposed CSA.

9. If the Board of Supervisors orders the formation of the CSA, LAFCO files a Certificate of Completion in the County Recorder's office and submits copies of the recorded documents to the State Board of Equalization. Fees for the Board of Equalization are paid by the proponents.

10. Following formation of the CSA, the Department of Public Works staff is assigned responsibility for managing the affairs of the newly formed district.

GENERAL PROCEDURES FOR
FORMATION OF A
COUNTY SERVICE AREA (CSA)
FOR A DEVELOPMENT PROJECT

1. When an application for a subdivision or other development project is submitted to the Department of Resource Management's Planning Division, and the project involves a community water system, sewage disposal system or other service which is likely to require a county service area for operation and maintenance, the proponent shall submit with the application a separate deposit in an amount, as determined by the Department of Public Works, sufficient to cover the cost of analysis and review of the proposed system by the County or its consultant.

2. Proponents shall submit a report prepared by an engineering firm experienced in the design, operation and maintenance of the type of system proposed, which includes a comprehensive analysis of the system with respect to the following:

   A. An analysis of probable major maintenance and capital improvement costs which will be required in the next 10 years.

   B. A discussion of all permits, right of ways, water rights, easements debts, fees, existing contracts and other legal or regulatory requirements which exist or will be required to operate the system.

   C. A financial plan which will insure the fiscal integrity of the system for the next years. Said plan to include all capital improvements, maintenance, monitoring, regulatory fees, and administration costs, etc. necessary for the County to operate the system.

3. The Department of Public Works staff will collect background data, financial details and comments from affected agencies.

4. Once the tentative map has been approved, an application is made to the Local Agency Formation Commission (LAFCO). The Department of Public Works staff prepares CEQA documents and becomes the Lead Agency. Proponents of the CSA must pay all LAFCO processing fees at this time.

5. LAFCO conducts a public hearing and a decision approving, conditionally approving, or disapproving the proposal is made by LAFCO.

6. If the proposal is approved, the Department of Public Works staff prepares a resolution of intention for the formation of the CSA for submission to the Board of Supervisors. This resolution will set the date for a public hearing at which time the Board of Supervisors will consider the formation of the CSA. This hearing will normally be held concurrently with approval of the final map or final approval of the development.

7. At the public hearing the Board of Supervisors may adopt a resolution ordering formation of the CSA, unless protests are received by more than 50% of the registered voters or owners of property valued at more than 50% of the value of all the property in the proposed CSA.

8. If the Board of Supervisors orders the formation of the CSA, LAFCO files a Certificate of Completion in the County Recorder's office and submits copies of the recorded documents to the State Board of Equalization. Fees for the Board of Equalization are paid by the proponents.

9. Following formation of the CSA, the Department of Public Works staff is assigned responsibility for managing the affairs of the newly formed district.